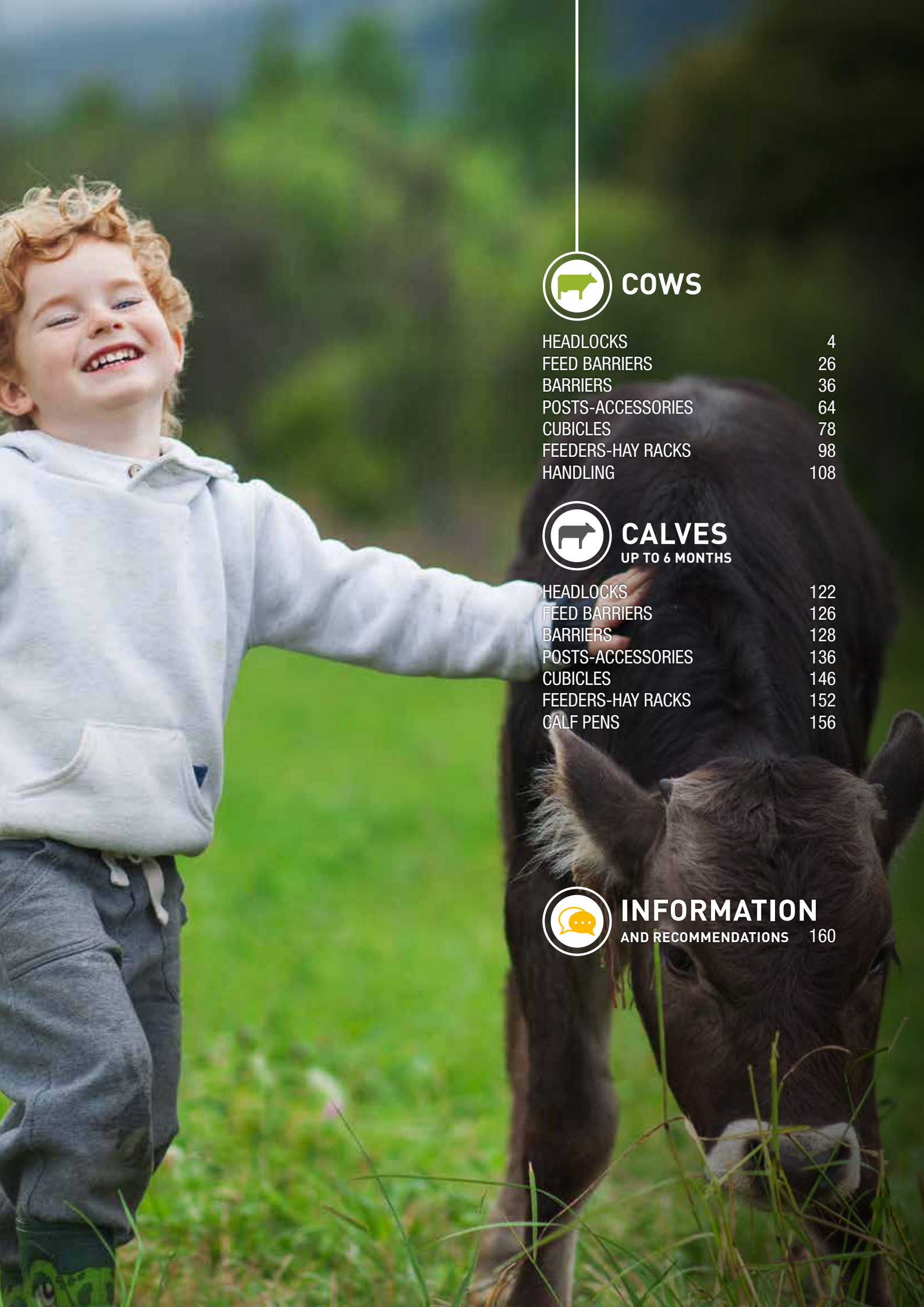

COWS

HEADLOCKS 4
FEED BARRIERS 26
BARRIERS 36
POSTS-ACCESSORIES 64
CUBICLES 78
FEEDERS-HAY RACKS 98
HANDLING 108

CALVES
UP TO 6 MONTHS

HEADLOCKS 122
FEED BARRIERS 126
BARRIERS 128
POSTS-ACCESSORIES 136
CUBICLES 146
FEEDERS-HAY RACKS 152
CALF PENS 156

INFORMATION

AND RECOMMENDATIONS 160

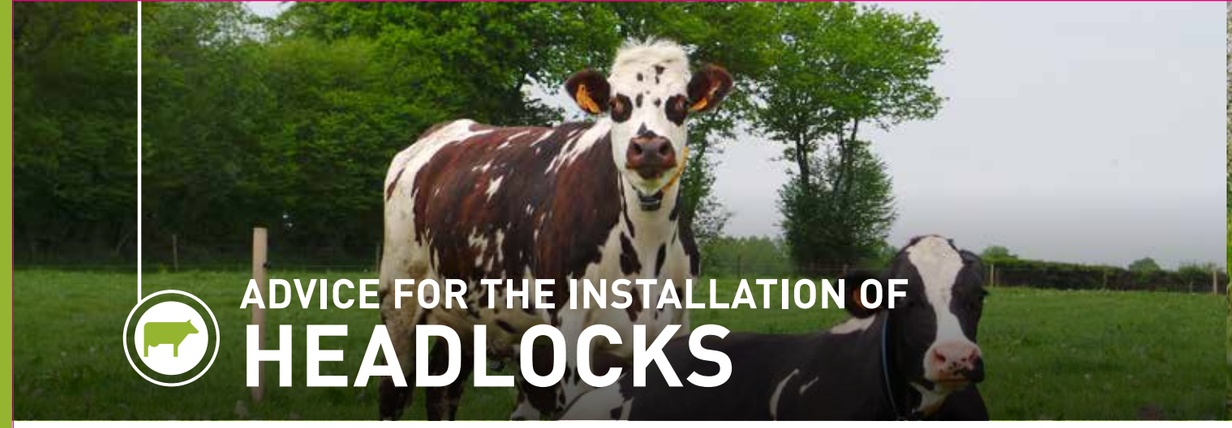

ADVICE FOR THE INSTALLATION OF HEADLOCKS

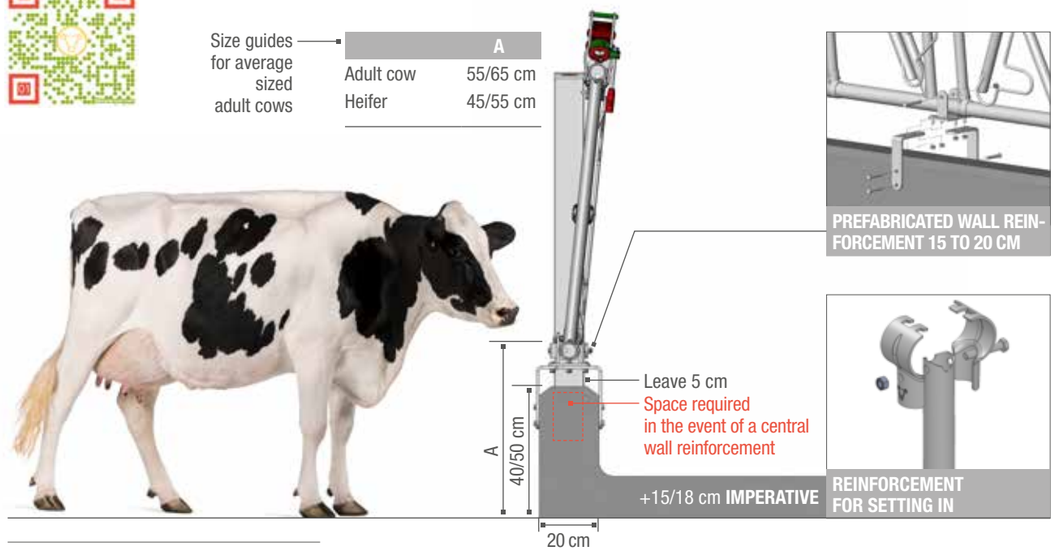

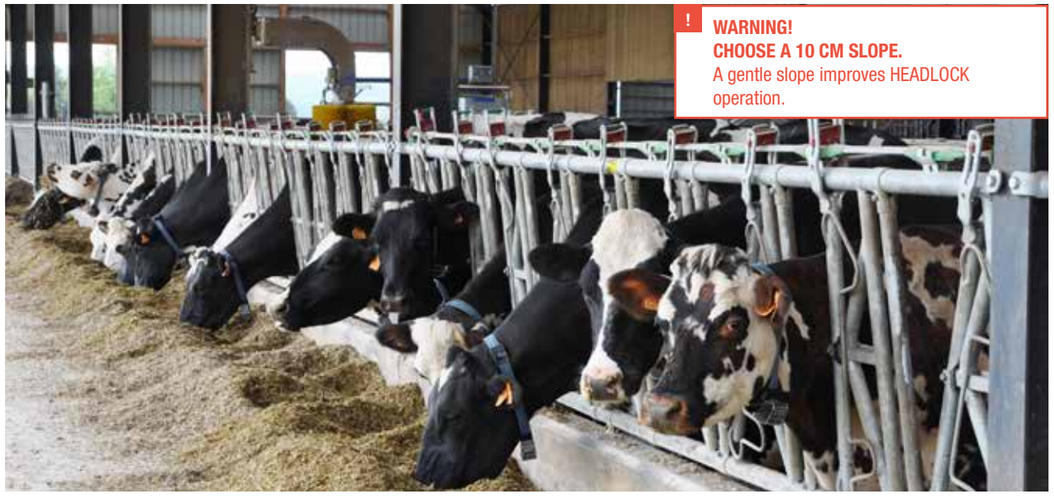

WARNING!
CHOOSE A 10 CM SLOPE.
A gentle slope improves HEADLOCK operation.

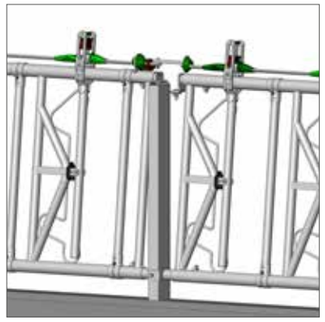

IMPERATIVE
It is essential to set in a reinforcement for 4, 5 and 6 metre panels.

HEADLOCK ASSEMBLY ON

SAFETY® IV POST

Apply bituminous paint to the base of the post.

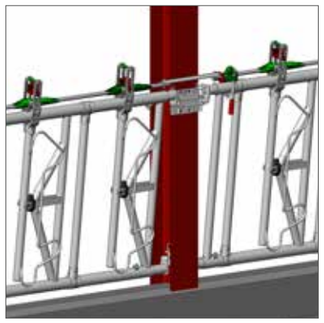

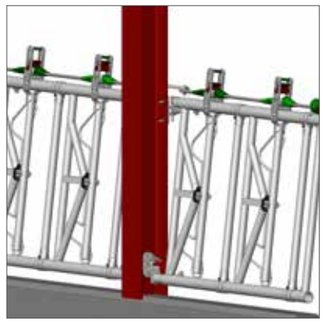

HEADLOCK ASSEMBLY

BRACKETS

Standard ends held in a double bracket on the upper outside face with a single bracket inside the staunchon to obtain a slope of 10 to 12 cm maximum enabling the linkages to be connected.
Do not forget the reinforcement for setting in.

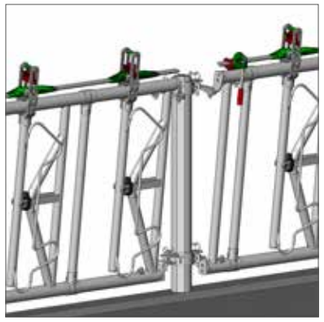

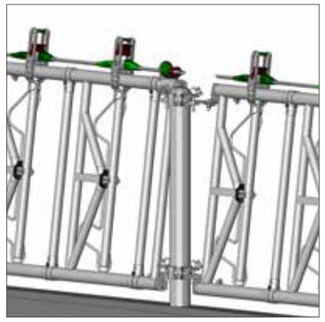

SAFETY® IV, AXIAL II AND RC II

MOUNTING HEADLOCKS ON A

102 MM OCTAGONAL POST

Assembly with the slope bar on top. Apply bituminous paint to the base of the post.

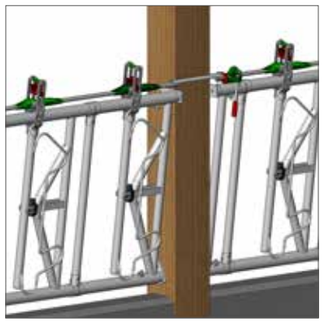

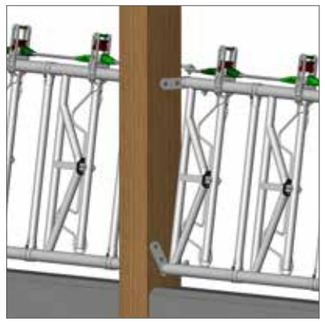

MOUNTING HEADLOCKS ON A

WOODEN POST

The ends are fixed to the post with a slope of 10 to 12 cm maximum enabling the linkages to be joined together. Don't forget the reinforcement for setting in, in order to prevent the ends from breaking.

SAFETY® IV
HEADLOCKS

HEADLOCKS
FOR SAFETY

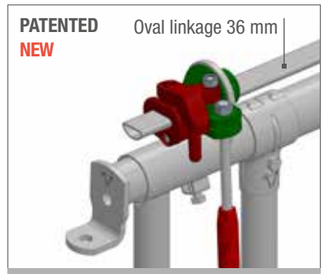

FOLDING CONTROL SINGLE-HANDED HANDLE

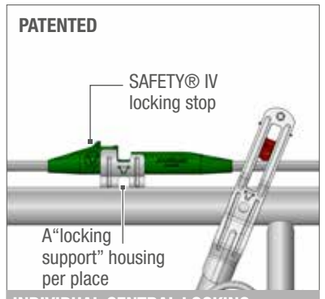

INDIVIDUAL CENTRAL LOCKING

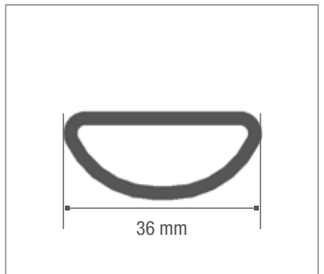

CONTROL PIPE PROFILE

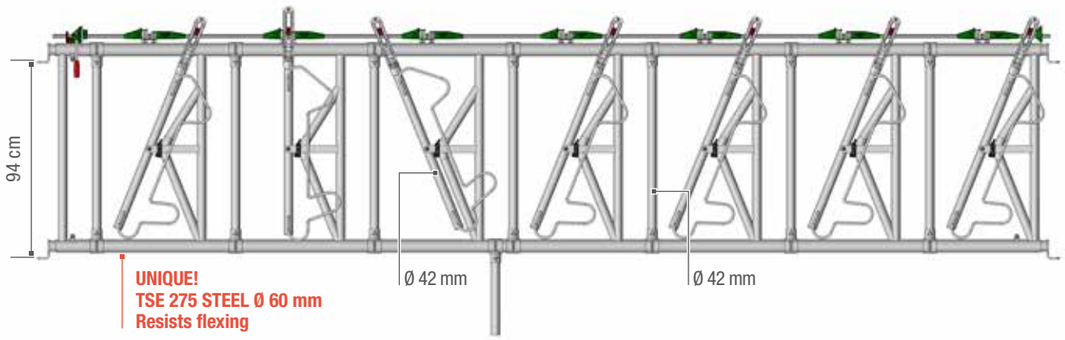

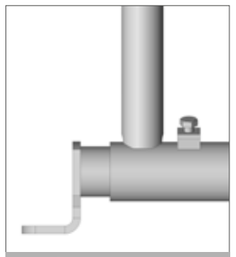

ADJUSTABLE END, RAISABLE AND SWIVELLING

RETURN TO ZERO (RAZ)

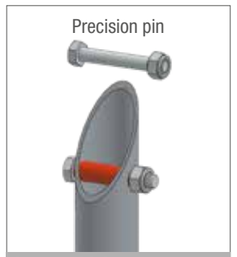

STAINLESS STEEL ANTI-WEAR BUSH FOR PIVOT

CALF GUARD

THE SAFETY® PANEL IS SUITABLE FOR DEHORNED DAIRY CATTLE. It is not suitable for fattening bullocks. The clearance in the lower half enables the herdsman to free fallen cattle easily. The nominal lengths correspond with the dimensions of the 102 mm posts from centre to centre.

IMPERATIVE
It is essential to set in a reinforcement for 4, 5 and 6 metre panels.

HEADLOCKS
SAFETY® IV ADJUSTABLE

SQ0110	Panel SAFETY®	1/1	(1 adult animal per 1 m)		29 kg
SQ0216	Panel SAFETY®	2/1.60	(2 adult animals per 1.60 m)		48 kg
SQ0320	PANEL SAFETY® HEIFER	3/2	(3 animals 12 to 18 months per 2 m) !		70 kg
SQ0430	Panel SAFETY®	4/3	(4 adult animals per 3 m)	(Pack x 6)	90 kg
SQ0534	Panel SAFETY®	5/3.40	(5 adult animals per 3.40 m)	(Pack x 6)	105 kg
SQ0644	Panel SAFETY® N.B. 5/3.40 + 2/1.60 = 6/4.40 + 2/1.60 =	6/4.40	(6 adult animals per 4.40 m) (7 adult animals per 5 m) (8 adult animals per 6 m)	(Pack x 6)	129 kg
SQ0854	Panel SAFETY®	8/5.40	(8 animals 18 to 24 months per 5.40 m) !	(Pack x 6)	174 kg
4 m					
SQ0540	Panel SAFETY®	5/4	(5 adult animals per 4 m)	(Pack x 6)	116 kg
SQ0640	Panel SAFETY®	6/4	(6 adult animals per 4 m)	(Pack x 6)	125 kg
SQ0740	PANEL SAFETY® HEIFER	7/4	(7 animals 6 to 14 months per 4 m) !	(Pack x 6)	145 kg
5 m					
SQ0650	Panel SAFETY®	6/5	(6 adult animals per 5 m)	(Pack x 6)	147 kg
SQ0750	Panel SAFETY®	7/5	(7 adult animals per 5 m)	(Pack x 12)	156 kg
SQ0850	Panel SAFETY®	8/5	(8 animals 18 to 24 months per 5 m) !	(Pack x 6)	168 kg
SQ0950	PANEL SAFETY® HEIFER	9/5	(9 animals 6 to 14 months per 5 m) !	(Pack x 6)	186 kg
6 m					
SQ0860	Panel SAFETY®	8/6	(8 adult animals per 6 m)	(Pack x 12)	186 kg
SQ0960	Panel SAFETY®	9/6	(9 animals 18 to 24 months per 6 m) !	(Pack x 6)	190 kg
SQ1060	Panel SAFETY®	10/6	(10 animals 12 to 18 months per 6 m) !	(Pack x 6)	206 kg
SQ1160	PANEL SAFETY® HEIFER	11/6	(11 animals 6 to 14 months per 6 m) !	(Pack x 6)	228 kg

HEADLOCKS
SAFETY® IV FIXED

THE FIXED YOKE SAFETY® HEADLOCK IS ONLY SUITABLE FOR DAIRY HERDS.

5 m					
SQ1750	Panel SAFETY® FIXED	7/5	(7 adult animals per 5 m)	(Pack x 12)	147 kg
SQ1850	Panel SAFETY® FIXED	8/5	(8 animals 12 to 24 months per 5 m) !	(Pack x 6)	160 kg
6 m					
SQ1860	Panel SAFETY® FIXED	8/6	(8 adult animals per 6 m)	(Pack x 12)	182 kg

! **THE AGE IS ONLY GIVEN AS AN EXAMPLE.**
Please adjust the settings to suit your stock.

HEADLOCKS

FOR SAFETY

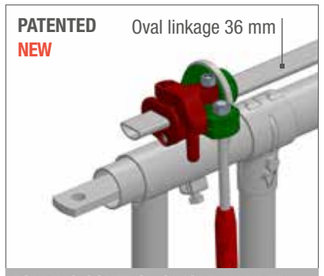

FOLDING CONTROL SINGLE-HANDED HANDLE

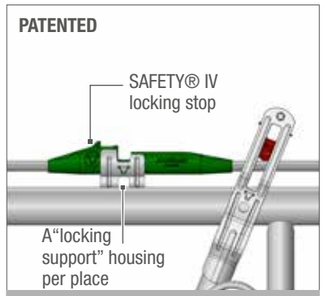

INDIVIDUAL CENTRAL LOCKING

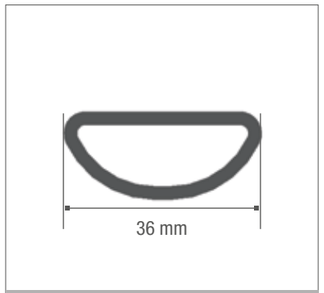

CONTROL PIPE PROFILE

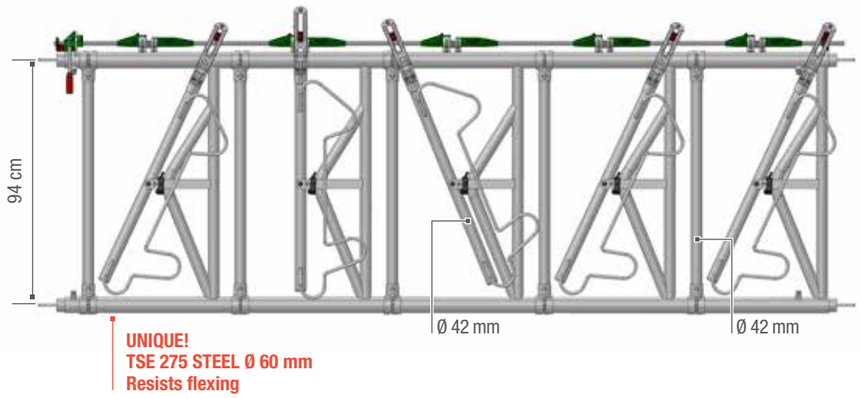

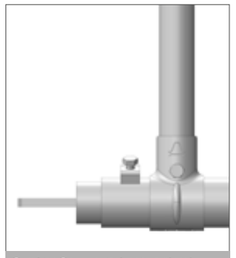

STRAIGHT END WELDED

RETURN TO ZERO (RAZ)

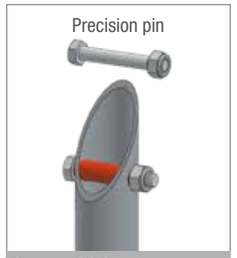

STAINLESS STEEL ANTI-WEAR BUSH FOR PIVOT

CALF GUARD

THE EXPORT MODEL OF THE SAFETY® IV HEADLOCK HAS SPECIFIED LENGTHS;
The nominal lengths are the dimensions with 102 mm post center.

IMPERATIVE
It is essential to set in a reinforcement for 4.60 and 4.80 meter panels.

HEADLOCKS

SAFETY® IV ADJUSTABLE EXPORT MODEL
(WITH STRAIGHT WELDED ENDS)

SQ0426	Panel SAFETY®	4/2.60	(4 animals 18 to 24 months per 2.60 m)	!	(Pack x 12)	80 kg
SQ0532	Panel SAFETY®	5/3.20	(5 animals 18 to 24 months per 3.20 m)	!	(Pack x 12)	100 kg
SQ0538	Panel SAFETY®	5/3.80	(5 animals 18 to 24 months per 3.80 m)	!	(Pack x 12)	108 kg
SQ0632	Panel SAFETY® HEIFER	6/3.20	(6 animals 6 to 14 months per 3.20 m)	!	(Pack x 12)	114 kg
SQ0638	Panel SAFETY®	6/3.80	(6 animals 18 to 24 months per 3.80 m)	!	(Pack x 12)	120 kg
SQ0738	Panel SAFETY® HEIFER	7/3.80	(7 animals 18 to 24 months per 3.80 m)	!	(Pack x 12)	121 kg

HEADLOCKS

SAFETY® IV ADJUSTABLE EXPORT MODEL
(WITH STANDARD ENDS NON-ASSEMBLED)

SQ0746	Panel SAFETY®	7/4.60	(7 animals 18 to 24 months per 4.60 m)	!	(Pack x 12)	150 kg
SQ0748	Panel SAFETY®	7/4.80	(7 animals 18 to 24 months per 4.80 m)	!	(Pack x 12)	152 kg
SQ0846	Panel SAFETY® HEIFER	8/4.60	(8 animals 6 to 14 months per 4.60 m)	!	(Pack x 12)	165 kg

HEADLOCKS

SAFETY® IV FIXED EXPORT MODEL
(WITH STRAIGHT WELDED ENDS)

THE FIXED YOKE SAFETY® HEADLOCK IS ONLY SUITABLE FOR DAIRY HERDS.

SQ1426	Panel SAFETY® FIXED	4/2.60	(4 animals 18 to 24 months per 2.60 m)	!	(Pack x 12)	80 kg
SQ1532	Panel SAFETY® FIXED	5/3.20	(5 animals 18 to 24 months per 3.20 m)	!	(Pack x 12)	94 kg
SQ1638	Panel SAFETY® FIXED	6/3.80	(6 animals 18 to 24 months per 3.80 m)	!	(Pack x 12)	110 kg

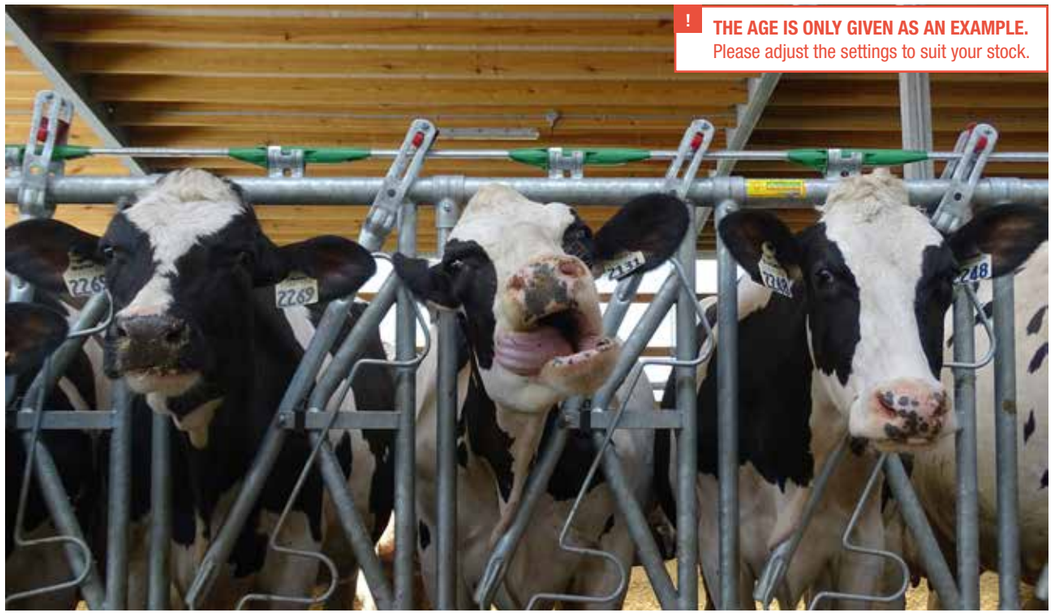

THE STRENGTHS OF THE SAFETY® IV HEADLOCK

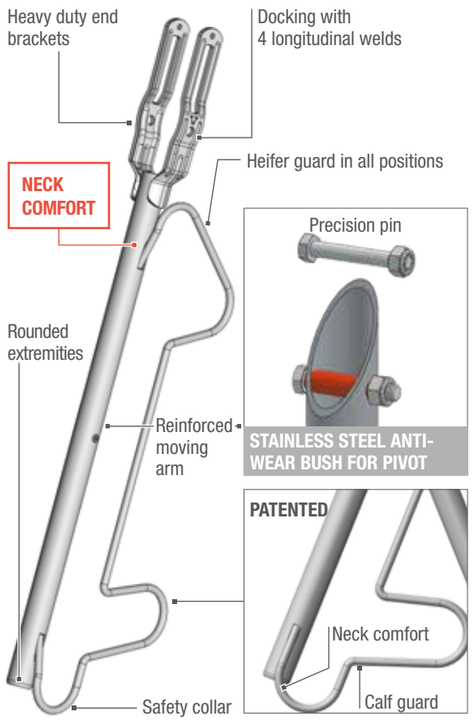

STAINLESS STEEL ANTI-WEAR BUSH FOR PIVOT

STEEL SAFETY® IV PIN TOUGH POLYAMIDE COATING, UNLOCKABLE, INACCESSIBLE FOR ANIMALS

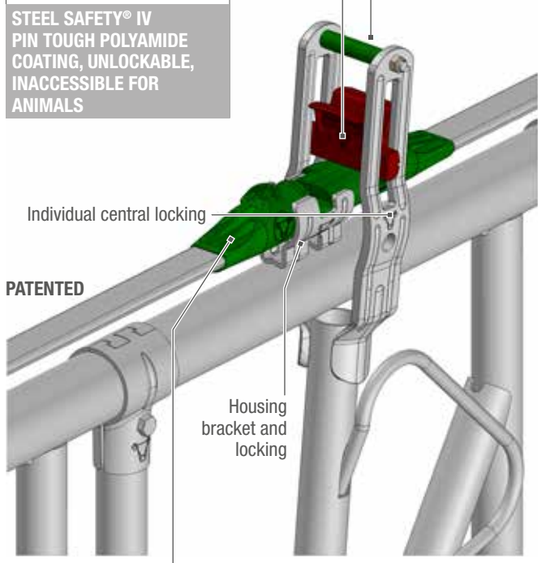

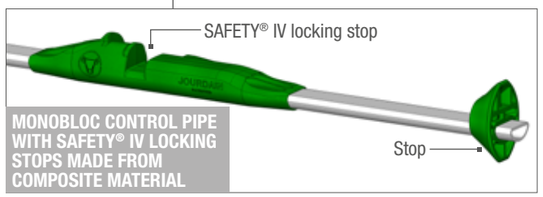

MONOBLOC CONTROL PIPE WITH SAFETY® IV LOCKING STOPS MADE FROM COMPOSITE MATERIAL

FOLDING CONTROL SINGLE-HANDED HANDLE

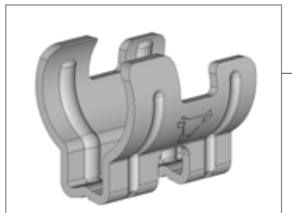

SAFETY® IV HOUSING AND LINKAGE AND LOCKING WITH BULGE REINFORCING (1 PER PLACE)

CLAWED CLAMP: ALL ANGLES ARE ROUNDED

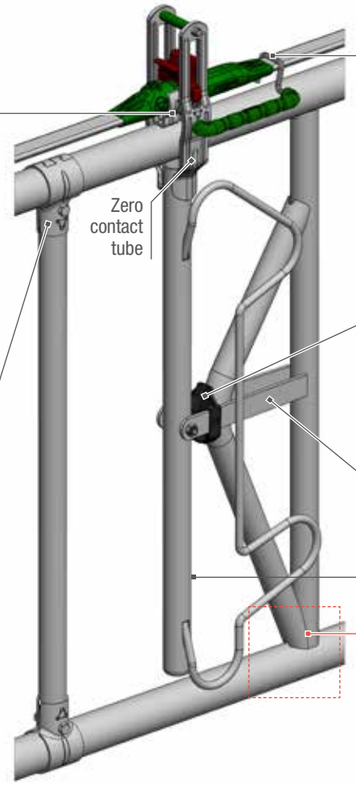

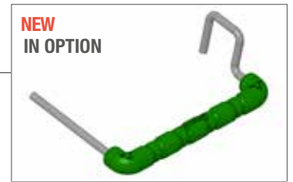

INDIVUDUAL LOCKING

RAZ SYSTEM: RETURN TO ZERO OF MOVING ARMS MAKING THEM SILENT IN THE OPEN POSITION

SYMMETRICAL CLEARANCE

= 3 POSITIONS

OBLIGATORY REINFORCEMENT FOR SETTING IN FOR 4, 5 AND 6 METRE PANELS

Lower clearance is equal to upper clearance (symmetry = safety)
Works in an inclined position

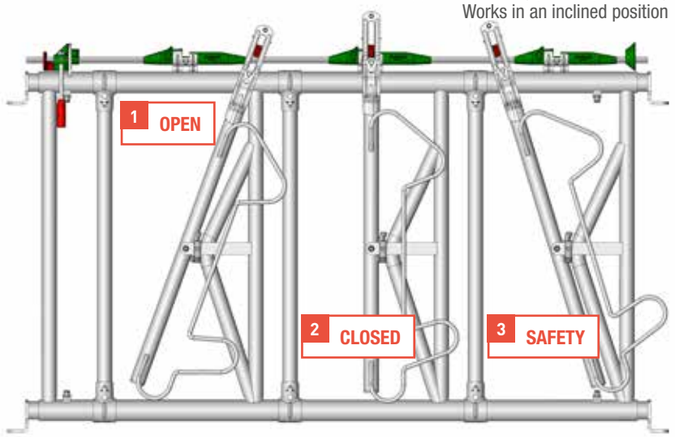

AXIAL II
HEADLOCK

ADJUSTABLE YOKE
WITH CLAWED CLAMPS AND REINFORCING BULGES

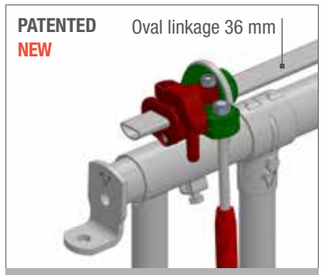

FOLDING CONTROL SINGLE-HANDED HANDLE

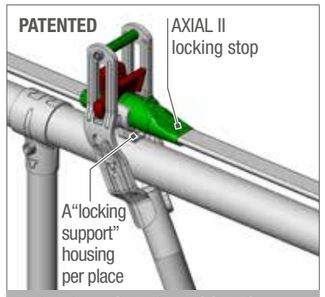

INDIVIDUAL CENTRAL LOCKING

INSET HEIFER GUARD

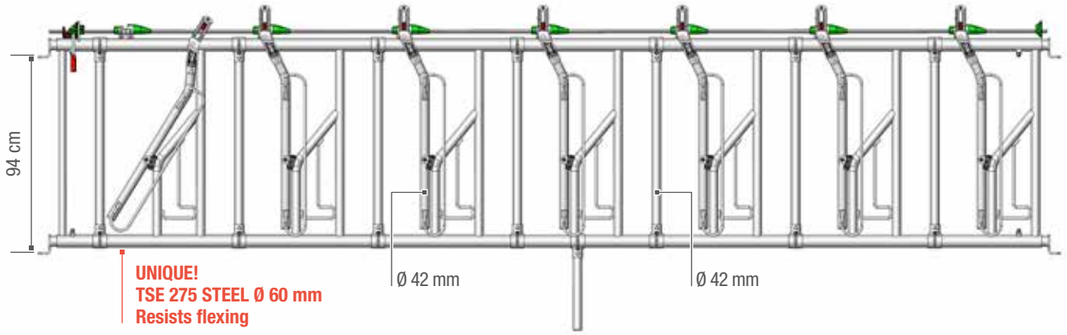

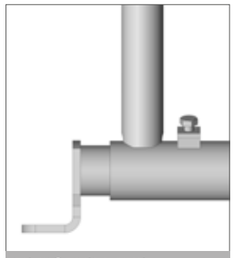

ADJUSTABLE END, RAISABLE AND SWIVELLING

ANTI-NOISE STOP

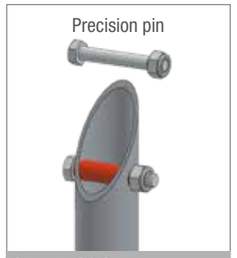

STAINLESS STEEL ANTI-WEAR BUSH FOR PIVOT

CALF GUARD

YouTube ENTER JOURDAIN

HEADLOCK
AXIAL II ADJUSTABLE

THE AXIAL II HEADLOCK, WITH ITS CURVED MOVING ARMS AND FORK BOTTOMS, PROVIDES A WIDE HEAD PASSAGE FOR LIGHTLY HORNED BEEF BREEDS. The AXIAL II HEADLOCK has one linkage support bracket per place, an AXIAL composite locking stop and the 36 mm half moon linkage. The nominal lengths correspond with the dimensions of the 102 mm posts from centre to centre.

OTHER					
PA0216	Panel AXIAL II	2/1.60	(2 adult animals per 1.60 m)		50 kg
PA0534	Panel AXIAL II	5/3.40	(5 adult animals per 3.40 m)	(Pack x 6)	110 kg
PA0644	Panel AXIAL II N.B. 5/3.40 + 2/1.60 6/4.40 + 2/1.60	6/4.40	(6 adult animals per 4.40 m) (7 adult animals per 5 m) (8 adult animals per 6 m)	(Pack x 6)	136 kg
4 m					
PA0540	Panel AXIAL II	5/4	(5 adult animals per 4 m)	(Pack x 6)	126 kg
PA0640	Panel AXIAL II	6/4	(6 adult animals per 4 m)	(Pack x 6)	127 kg
5 m					
PA0650	Panel AXIAL II	6/5	(6 adult animals per 5 m)	(Pack x 6)	152 kg
PA0750	Panel AXIAL II	7/5	(7 adult animals per 5 m)	(Pack x 12)	157 kg
PA0850	Panel AXIAL II	8/5	(8 animals from 18 to 24 months per 5 m) !	(Pack x 6)	171 kg
6 m					
PA0860	Panel AXIAL II	8/6	(8 adult animals per 6 m)	(Pack x 12)	193 kg
PA0960	Panel AXIAL II	9/6	(9 animals from 18 to 24 months per 6 m) !	(Pack x 6)	195 kg
PA1060	Panel AXIAL II	10/6	(10 animals from 12 to 18 months per 6 m) !	(Pack x 6)	210 kg

HEADLOCK
AXIAL / BULL

SPECIAL REINFORCED HEADLOCK FOR BULLS WITH ADJUSTABLE YOKE. Fitted with 4 welded straight ends. Mounted at 1 m from centre to centre of a 102 mm post.

*Model reinforced for bulls. The anti-noise stop cannot be fitted to this model.

PA0380	Panel AXIAL/BULL*	1/1	(1 place per 1 m) Linkage old model	31 kg

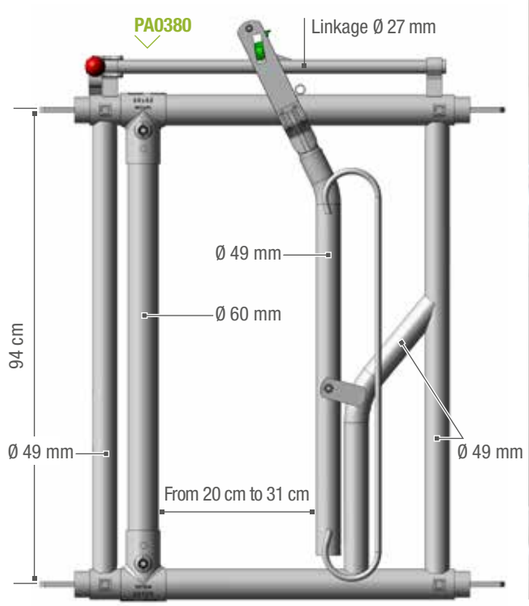

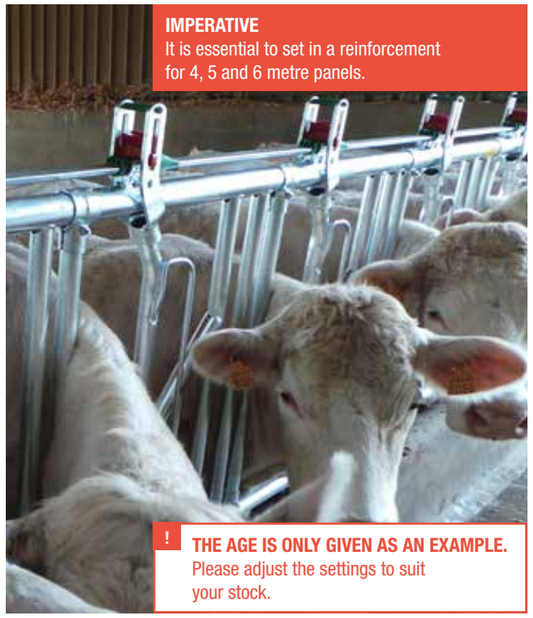

HEADLOCK SAFETY®
KIT FORM (MODULAR)

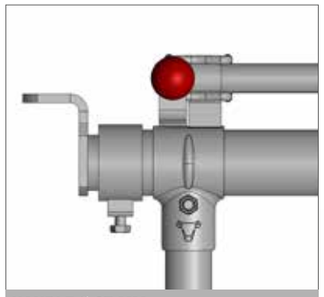

HANDLE Ø 27 MM

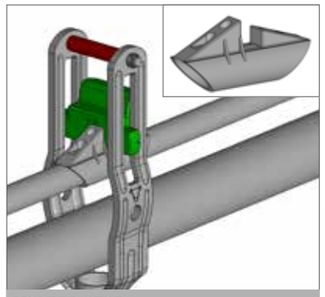

MOLDED STOP

CONTROL PIPE GUIDE

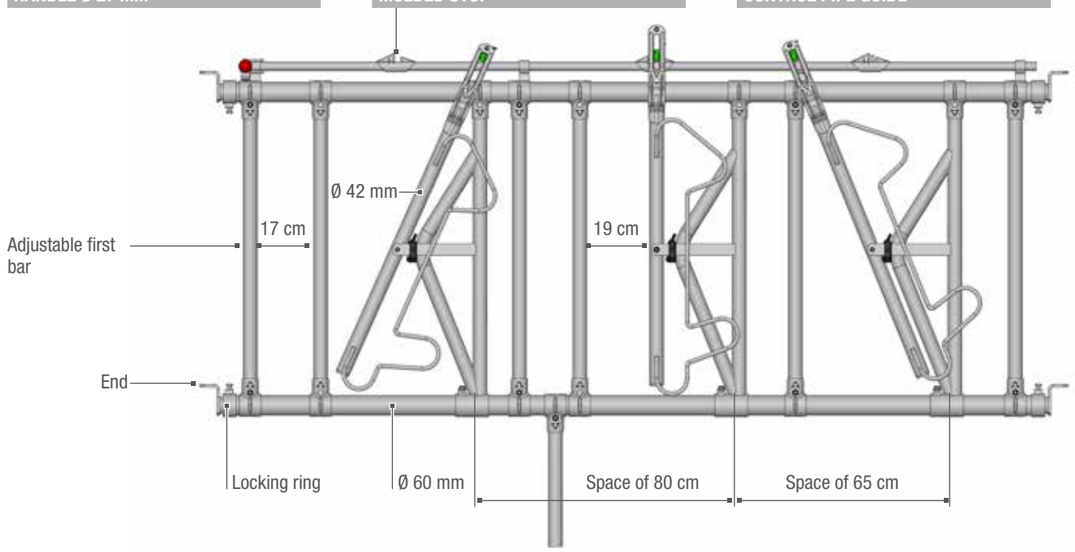

M00235
Adjustable bar for module

M00250
Place module SAFETY®

M00233
Supplementary start bar

MODULES
SAFETY®

THE MODULES ENABLE "MADE-TO-MEASURE" PANELS TO BE CREATED IN ORDER TO EQUIP ALL NON-STANDARD AREAS AND BAYS. THEY ARE SUPPLIED IN KIT FORM, READY FOR ASSEMBLY. All dimensions over 600 mm per animal are possible with a maximum 6 m length.

M00250	Place module SAFETY® up to 750 mm/place	14 kg

SUPPLEMENTARY START BAR

ALLOW ONE BAR WITH CONTROL PIPE GUIDE PER SAFETY® PANEL

M00233	Supplementary start bar	3,5 kg

SUPPLEMENTARY BAR
SAFETY®

ALLOW ONE ADJUSTABLE SUPPLEMENTARY BAR PER 200 MM OVER 750 MM PER PLACE.

M00235	Adjustable bar for module	3,5 kg

MODULE SUPPORT FRAME
SAFETY®

M00236	Frame module 2 m	26 kg
M00237	Frame module 3 m	34 kg
M00238	Frame module 4 m	42 kg
M00239	Frame module 5 m (with reinforcement)	52 kg
M00240	Frame module 6 m (with reinforcement)	60 kg

RING FOR
LOCKING

FOR LOCKING THE MODULE AND ADAPTING THE END ON A 3 OR 4 PLACE HAY RACK SECTION.

M05049	Module locking ring	0,27 kg

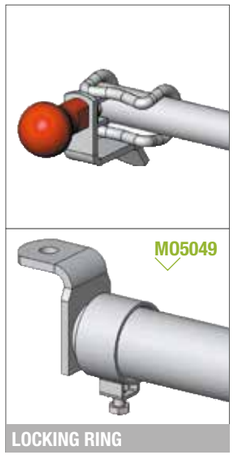

LOCKING RING

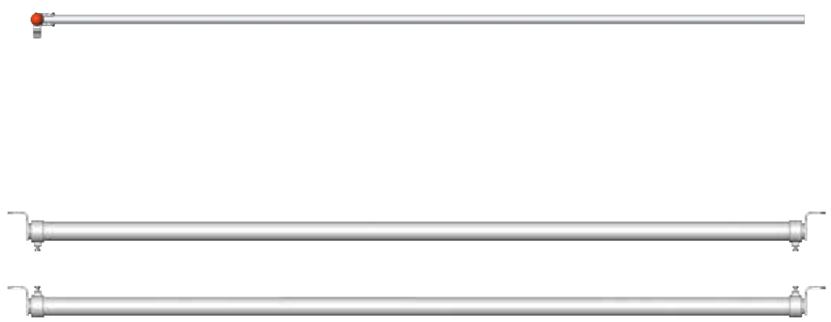

SUPPORT FRAME FOR SAFETY MODULE

RC II
(GROUP ADJUSTMENT)

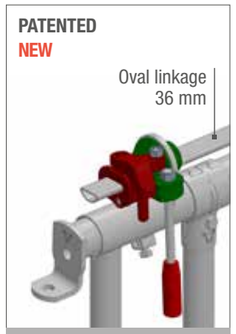

FOLDING CONTROL SINGLE-HANDED HANDLE

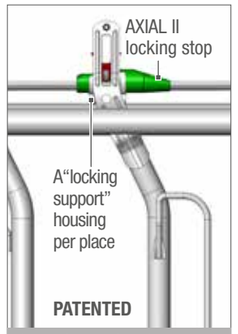

CENTRAL INDIVIDUAL LOCKING

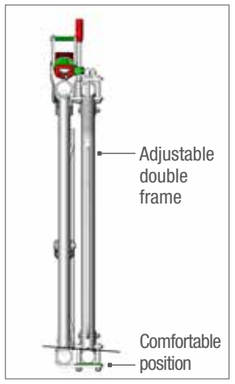

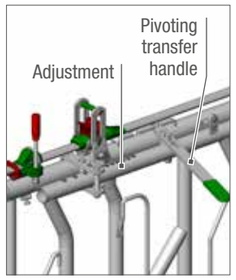

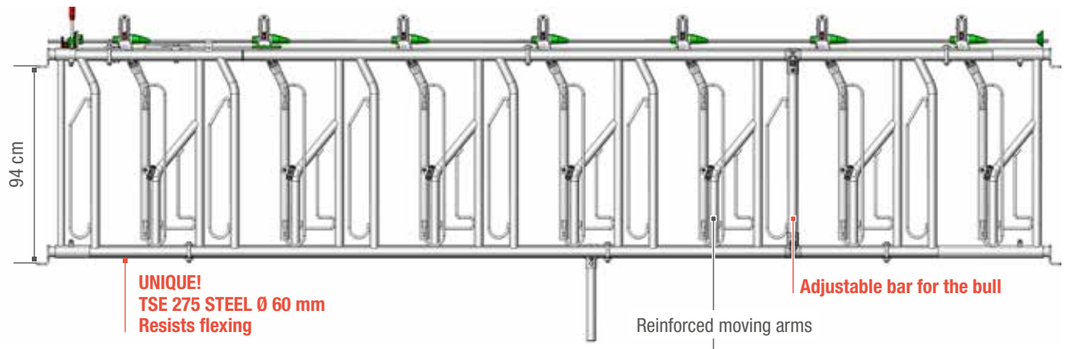

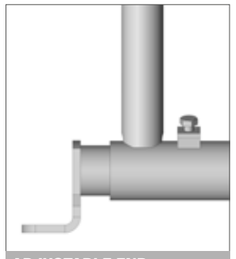

ADJUSTABLE END, RAISABLE AND SWIVELLING

ANTI-NOISE STOP

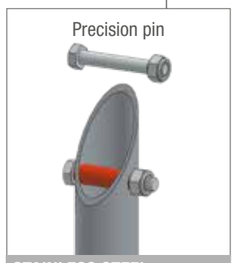

STAINLESS STEEL ANTI-WEAR BUSH FOR PIVOT

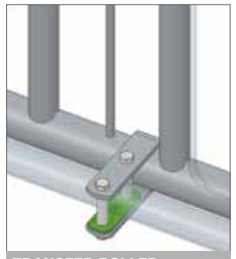

TRANSFER ROLLER AND SLIDER

YouTube ENTER JOURDAIN

RC II HEADLOCKS:

COLLECTIVE ADJUSTMENT

THE RC II HEADLOCK IS DERIVED FROM THE AXIAL II HEADLOCK, WITH ITS CURVED MOVING ARMS AND FORK BOTTOMS, IT PROVIDES A WIDE HEAD PASSAGE FOR LIGHTLY HORNED BEEF CATTLE. The RC II HEADLOCK has a linkage support housing per place, an AXIAL II composite locking stop and a half moon linkage. It is fitted with a double frame and a pivoting handle that provides precise collective yoke adjustment.

RC0216	RC II HEADLOCKS	2/1,60 m	(2 adult animals per 1.60 m)		55 kg
RC0534	RC II HEADLOCKS	5/3,40 m	(5 adult animals per 3.40 m)		128 kg
RC0644	RC II HEADLOCKS	6/4,40 m	(6 adult animals per 4.40 m)		149 kg
4 m					
RC0640	RC II HEADLOCKS	6/4 m	(6 adult animals per 4 m)		146 kg
5 m					
RC0750	RC II HEADLOCKS	7/5 m	(7 adult animals per 5 m)		184 kg
RC0850	RC II HEADLOCKS	8/5 m	(8 animals from 18 to 24 months per 5 m)	!	197 kg
6 m					
RC0860	RC II HEADLOCKS	8/6 m	(8 adult animals per 6 m)		217 kg
RC0960	RC II HEADLOCKS	9/6 m	(9 animals from 18 to 24 months per 6 m)	!	221 kg
RC1060	RC II HEADLOCKS	10/6 m	(10 animals from 12 to 18 months per 6 m)	!	240 kg

! **WARNING!**
This headlock has been designed to obtain rapid yoke adjustment. The herdsman must adapt it to suit the breed and the age of the animals. Jourdain cannot be held liable in the event of an accident due to poor adjustment.

IMPERATIVE
It is essential to set in a reinforcement for 4, 5 and 6 metre panels.

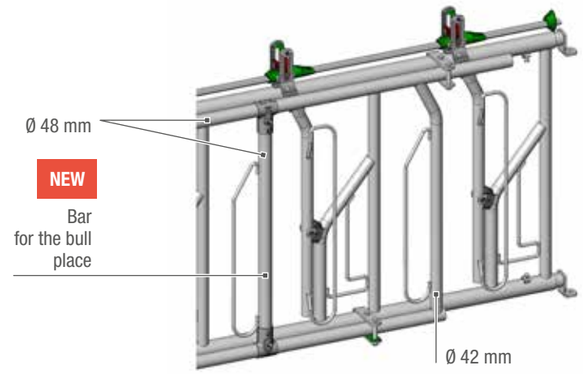

! **PRECISE ADJUSTMENT**
for yokes to suit the size of the animals.

SWEDISH
MONOTUBE

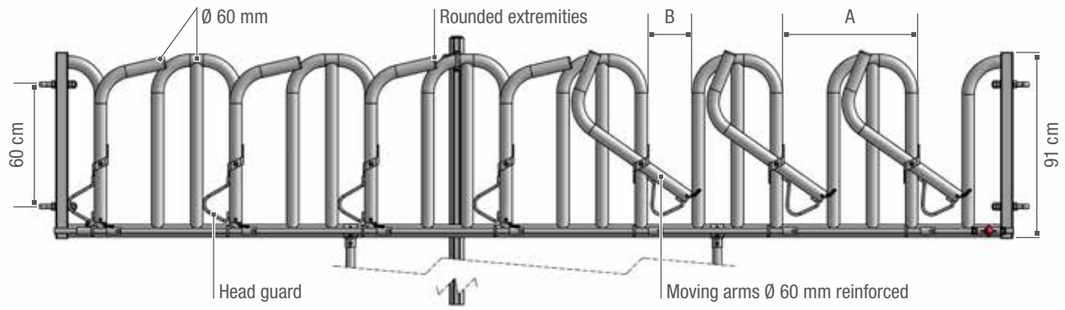

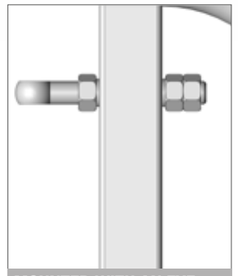

MOUNTED WITH AN EYE BOLT

REINFORCED RATCHET NOISE LIMITER

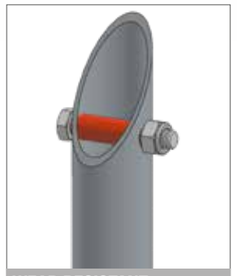

WEAR RESISTANT BUSH ON HINGE

QUARTER TURN LOCKING HANDLE

	A	B
4 places per 3 m	67 cm	22 cm
5 places per 4 m	75 cm	22 cm
6 places per 5 m	80 cm	22 cm
7 places per 5 m	67 cm	22 cm

! WARNING!
Use bar post 2.13 m with brackets.

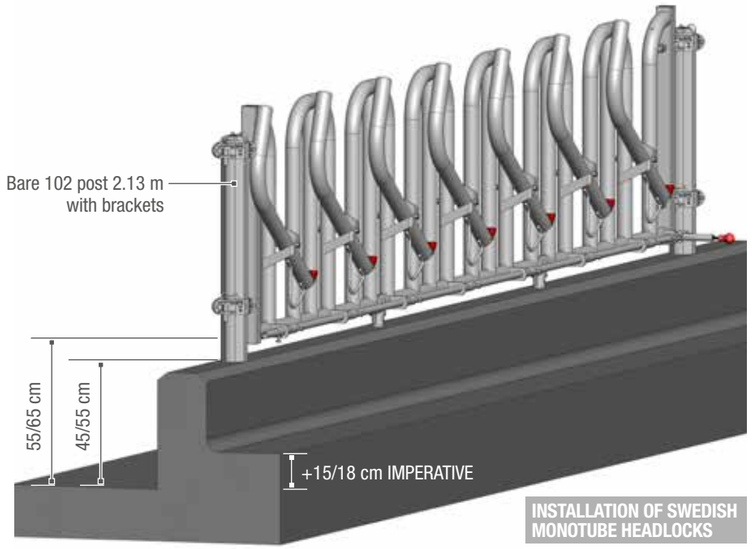

INSTALLATION OF SWEDISH MONOTUBE HEADLOCKS

SWEDISH MONOTUBE HEADLOCK

FIXED YOKE

AUTOMATIC SWEDISH TYPE MONOTUBE HEADLOCK WITH LOWER LOCKING.

Made of 60 mm tube only. Intended for heavily horned animals only.

PREFERABLY ALLOW ONE POST Ø 76 MM AND ONE BRACKET Ø 76 MM, OTHERWISE USE TWO REINFORCEMENTS FOR SETTING IN FOR THE 4 AND 5 M PANELS. The nominal lengths correspond with the dimensions of the 102 mm posts from centre to centre.

PS0311	Panel Swedish MONOTUBE Yoke size adjustable from 22 to 28 cm only for this model. With two eyebolts on one end.	1/1	(1 place/1 m)		32 kg
3 m					
PS0343	Panel Swedish MONOTUBE With 4 eyebolts at 1 end	4/3	(4 places/3 m)	(Pack x 6)	94 kg
4 m					
PS0354	Panel Swedish MONOTUBE With 1 reinforcement and 4 eyebolts	5/4	(5 places/4 m)	(Pack x 6)	127 kg
5 m					
PS0365	Panel Swedish MONOTUBE With 2 reinforcement and 4 eyebolts	6/5	(6 places/5 m)	(Pack x 6)	154 kg
PS0375	Panel Swedish MONOTUBE With 2 reinforcement and 4 eyebolts	7/5	(7 places/5 m)	(Pack x 6)	159 kg

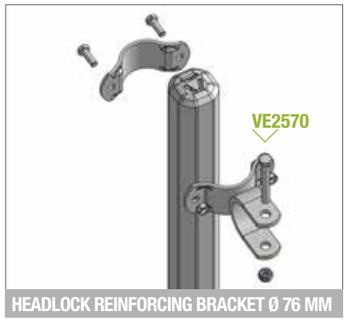

HEADLOCK REINFORCING BRACKET Ø 76 MM

IMPERATIVE
A post Ø 76 mm or 1 reinforcements for setting in for a 4 m panel and 2 reinforcements for setting in for a 5 m panel.

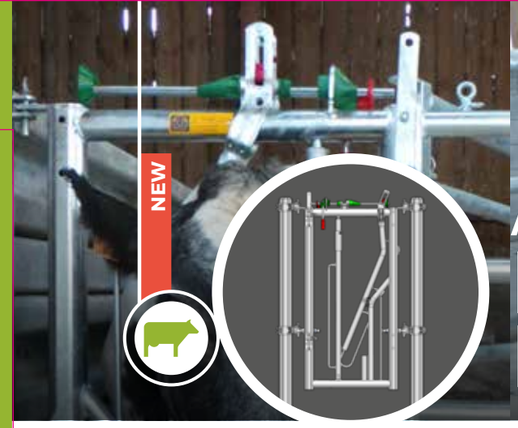

AUTOMATIC INSEMINATION HEADLOCK

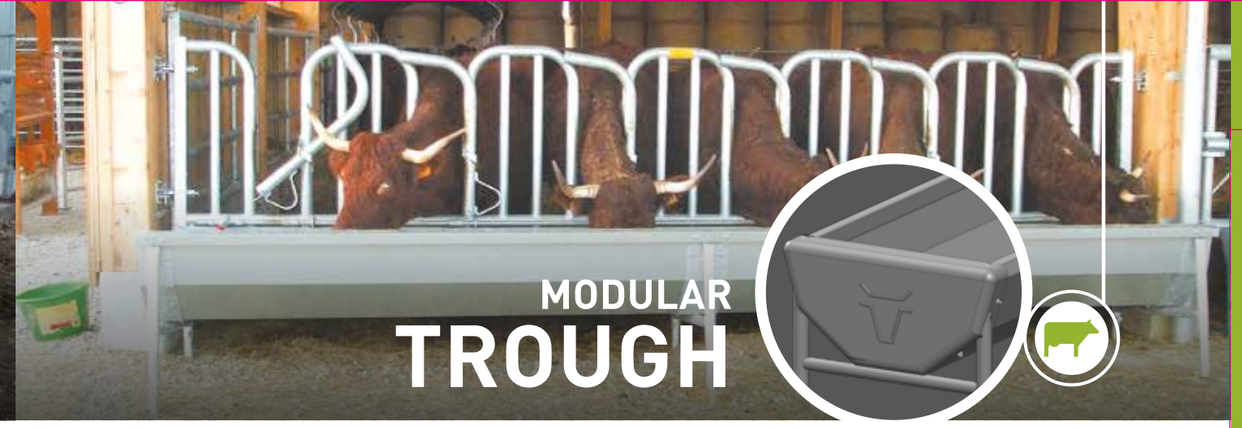

MODULAR TROUGH

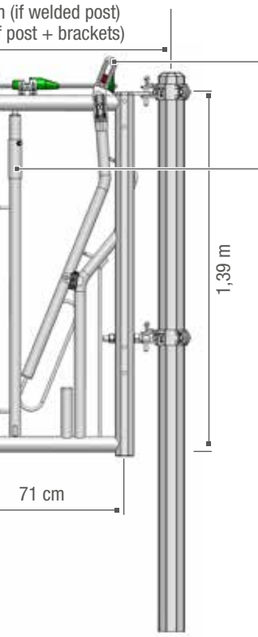

BA5041
Automatic insemination HEADLOCK

Adjustable yoke, demountable by a tall handle

HEADLOCK

INSEMINATION

REINFORCED AUTOMATIC INSEMINATION HEADLOCK, FITTED WITH A HALF MOON LINKAGE, LOCKING HOUSING AND COMPOSITE STOP.

It consists of an adjustable yoke, that is easily demountable using a tall handle to release fallen animals. It consists of two uprights made from Ø 76 mm tube. A pair of single brackets are attached to the upright for mounting a Caesarean gate. The headlock does not have an adjustable end, and is supported by two octagonal posts Ø 102 mm with 1 m centres post to post. It is delivered with a flat rope holder (rope not supplied).

BA5041	Automatic insemination HEADLOCK L.1 m	41 kg	**NEW**

MODULAR TROUGH

GALVANISED

GALVANISED STEEL SHEET THICKNESS 20/10 THS HALF ROUND SHAPE. Adjustable height and slope.

AU2211	Modular trough L. 2 m	73 kg
AU2212	Modular trough L. 2.50 m	84 kg
AU2213	Modular trough L. 4 m	130 kg
AU2214	Modular trough L. 4.50 m	141 kg
AU2215	Modular trough L. 5 m	152 kg
AU2216	Modular trough L. 6 m	187 kg
RETAIL		
AU9915	End piece	13 kg
AU9916	Intermediate stand	10 kg
AU9917	Steel sheet L. 2.50 m for modular trough	58 kg
AU9918	Steel sheet L. 2 m for modular trough	47 kg
OLD MODEL RETAIL		
AU9927	Steel sheet L. 2.50 m for modular trough old model	58 kg
AU9928	Steel sheet L. 2 m for modular trough old model	47 kg

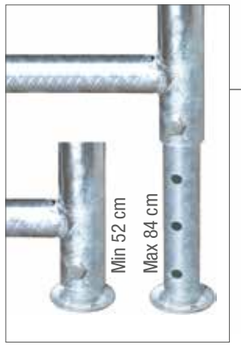

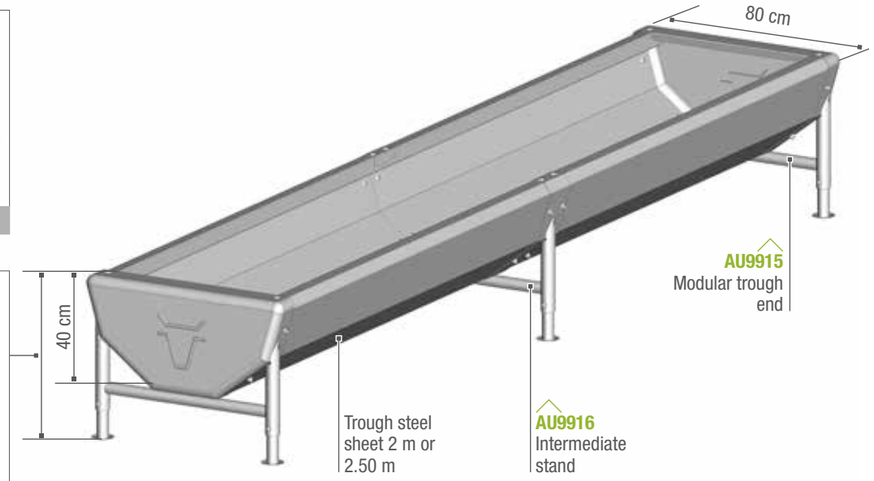

! **WARNING!** Because of the corrosion risk with silage, it is essential to apply a coat of food resin to the inside of the troughs before use, and then periodically afterwards. It is absolutely FORBIDDEN to use the bituminous paint TR0005 in troughs.

ACCESSORIES
HEADLOCK

PR5052
Extended end

PR5053
Supplementary bar

MO0234
Reinforcement for setting in

VE2570
Headlock reinforcing bracket Ø 76 mm

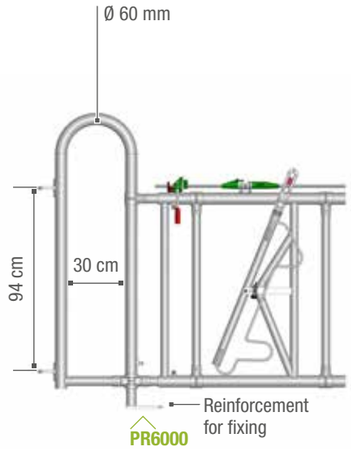

PR6000
Headlock man passage end

MO0260
Reinforcement for prefabricated wall 15 to 20 cm

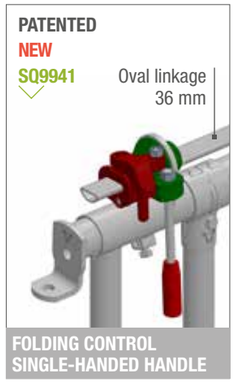

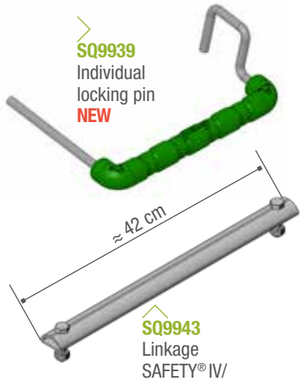

SQ9939
Individual locking pin
NEW

SQ9943
Linkage SAFETY® IV/ AXIAL II

PA9901
Bare AXIAL II moving arm (half moon linkage 36 mm)

MO5050
Standard end

MO5052
L form flat end

MO5054
Welded straight end

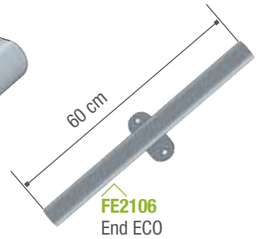

FE2106
End ECO double

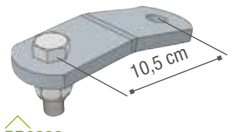

PR0298
Strut for inclining headlocks - self-service barriers

SQ9950
Post SAFETY® IV

PA9917

Bolt 12/90

PT9910
Clawed clamp 60/60

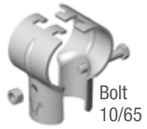

Bolt 10/65

PR9910
Clawed clamp 60/42 mm

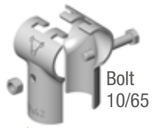

Bolt 10/65

AT0201
Clawed clamp 42/42 mm

Bolt 10/50

VE2505
Clawed clamp 42/27 mm

Bolt 12/90

LO3166
Clawed clamp 49/60 mm

ACCESSORIES
SAFETY® HEADLOCK

SQ9940	SAFETY IV bare swing arm	5 kg

ACCESSORIES
AXIAL II / RC II HEADLOCK

PA9901	Bare AXIAL II moving arm (half moon linkage 36 mm)	4.6 kg
PA9917	Anti-noise buffer AXIAL II/RC grey	0.1 kg

ACCESSORIES
SAFETY® IV / AXIAL II / RC II HEADLOCK

SQ9941	Control Handle SAFETY® IV & AXIAL II		0.5 kg
SQ9943	Linkage SAFETY® IV / AXIAL II		0.8 kg
PR5052	Headlock extended end (+ 50 cm)		10 kg
PR5053	Supplementary bar for HEADLOCK extended end up to 25 cm		3 kg
PR0298	Strut (2 per panel) unit		0.6 kg
SQ9950	Post SAFETY® IV for setting into the ground 10 x 6 cm L. 2 m. Only for slope mounting (SAFETY® / AXIAL)		18 kg
MO0260	Reinforcement for prefabricated wall (15 to 20 cm)	(Pack x 6)	4.5 kg
MO5050	Standard adjustable end		1.3 kg
MO5052	L form flat end		1.3 kg
MO5054	Straight end welded		1.3 kg
FE2106	End ECO double		2.3 kg
MO0234	Reinforcement for setting in		1.5 kg
PR6000	HEADLOCK man passage end (+ 50 cm). Do not use this end with a post SAFETY® IV		20 kg
VE2570	HEADLOCK reinforcing bracket Ø 76 mm		1.5 kg
MO5049	Module locking ring		0.27 kg
SQ9939	Individual locking pin		0.2 kg NEW

ACCESSORIES
SWEDISH MONOTUBE

MO0260	Reinforcement for prefabricated wall (15 to 20 cm)	4.5 kg
MO0234	Reinforcement for setting in	1.5 kg
VE2570	HEADLOCK reinforcing bracket Ø 76 mm	1.5 kg
PS9930	Swing arm MONOTUBE Ø 60 mm	4.4 kg

CLAWED CLAMP

PT9910	Clawed clamp 60/60 (AXIAL bull 1P / 1M)	0.9 kg
PR9910	Clawed clamp 60/42 (SAFETY® or AXIAL)	0.6 kg
AT0201	Clawed clamp 42/42 (Creep feeder)	0.5 kg
VE2505	Clawed clamp 42/27 (Calf HEADLOCK)	0.3 kg
LO3166	Clawed clamp 49/60 (RELAX)	0.9 kg

PANEL FATTENING
2 TUBES

FATTENING

2 TUBES OCTAGONAL PROFILE

PANEL FOR FATTENING WITH A WELD FREE FRAME 2 OCTAGONAL TUBES Ø 102 MM WITH A SPACER ⧄ 10 X 6 CM MOUNTED WITH CLAMPS. Adjusted using the 2 ends, and that can be raised by 188 mm easily when turned over.

PE0203	Panel fattening 2 tubes L. 3 m (no spacer)	(Pack x 6)	65 kg
PE0204	Panel fattening 2 tubes L. 4 m (no spacer)	(Pack x 6)	78 kg
PE0205	Panel fattening 2 tubes L. 5 m (1 spacer ⧄ 10 x 6 cm)	(Pack x 6)	100 kg
PE0206	Panel fattening 2 tubes L. 6 m (1 spacer ⧄ 10 x 6 cm)	(Pack x 6)	116 kg
PE0291	Reverse hinge for mounting on a post Ø 102 mm		23 kg
PE0292	Reverse hinge for H post		19 kg
PE0298	Half Reverse hinge for H post		9 kg
PR0298	Strut (2 per panel) unit		0.63 kg
PIECES SUPPLIED INDIVIDUALLY			
PE0290	End fattening 2 tubes		13 kg
TR9104	Tube Octogonal Ø 102 mm L. 3.46 m T. 3 mm (panel of 4 m)		26 kg
TR9105	Tube Octogonal Ø 102 mm L. 4.46 m T. 3 mm (panel of 5 m)		34 kg
TR9106	Tube Octogonal Ø 102 mm L. 5.46 m T. 3 mm (panel of 6 m)		42 kg
PE0293	Spacer fattening 2 tubes + clawed clamps		6 kg

PE0290

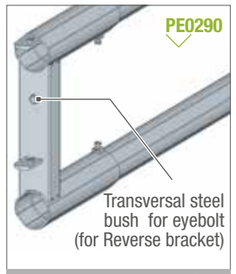

END FATTENING 2 TUBES

PE0293

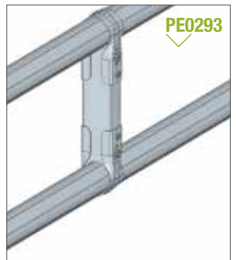

SPACER FATTENING
2 TUBES + CLAWED CLAMPS

PE0298

HALF REVERSE HINGE
FOR H POST

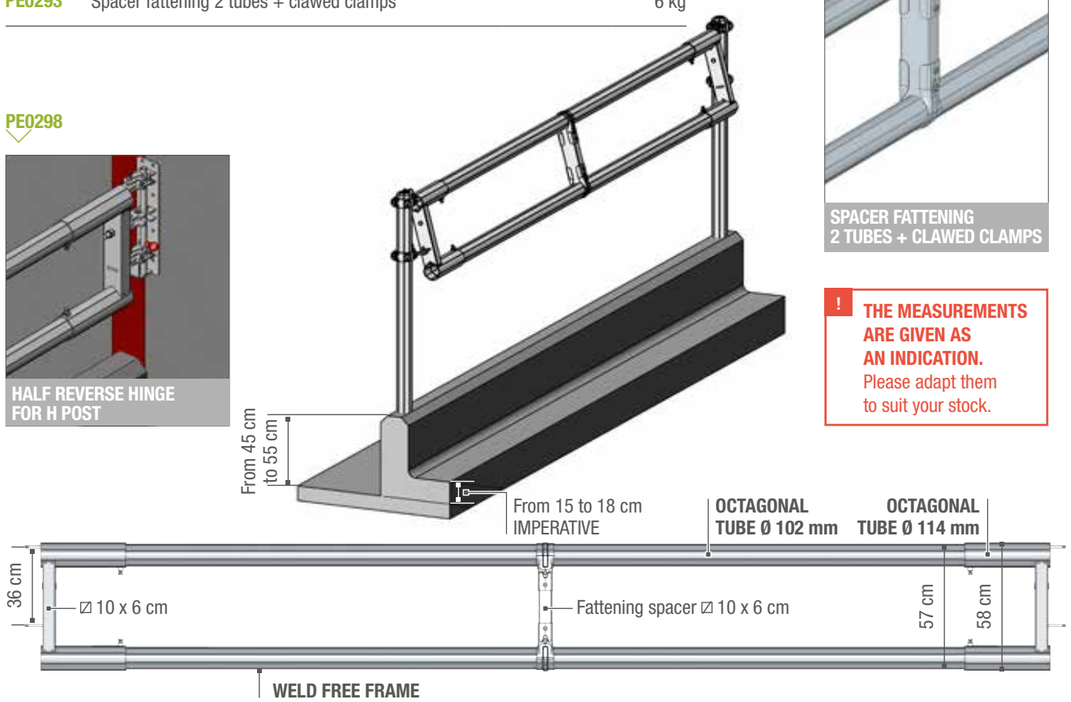

! **THE MEASUREMENTS ARE GIVEN AS AN INDICATION.** Please adapt them to suit your stock.

FITTING AN

H PROFILE STAUNCHON WITH REVERSE BRACKET

The Reverse hinge can be fitted to an H staunchon from 10 to 22 cm, it can be locked and unlocked quickly and easily so that the fattening panel to be raised in order for it to be adapted to suit the growth of the livestock.

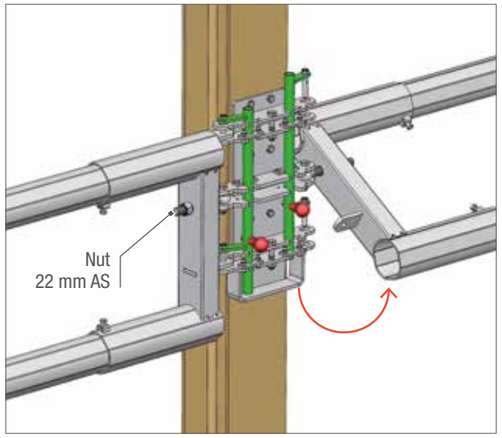

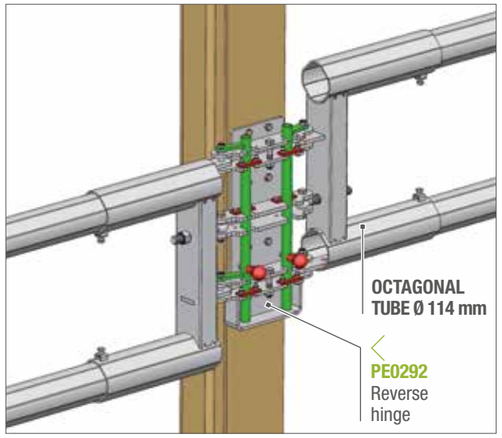

HINGE FOR MOUNTING ON

BRACKET Ø 102 MM

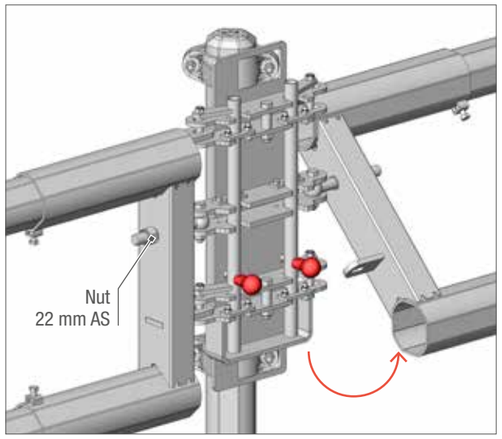

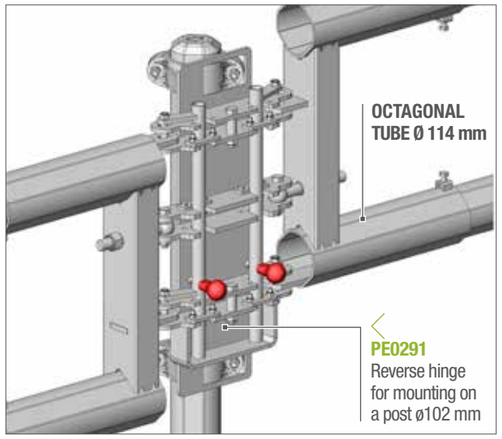

! **WARNING!**
For your safety, ensure that the 2 tube fattening panel is well supported when it is turned, in order to prevent it from dropping suddenly.

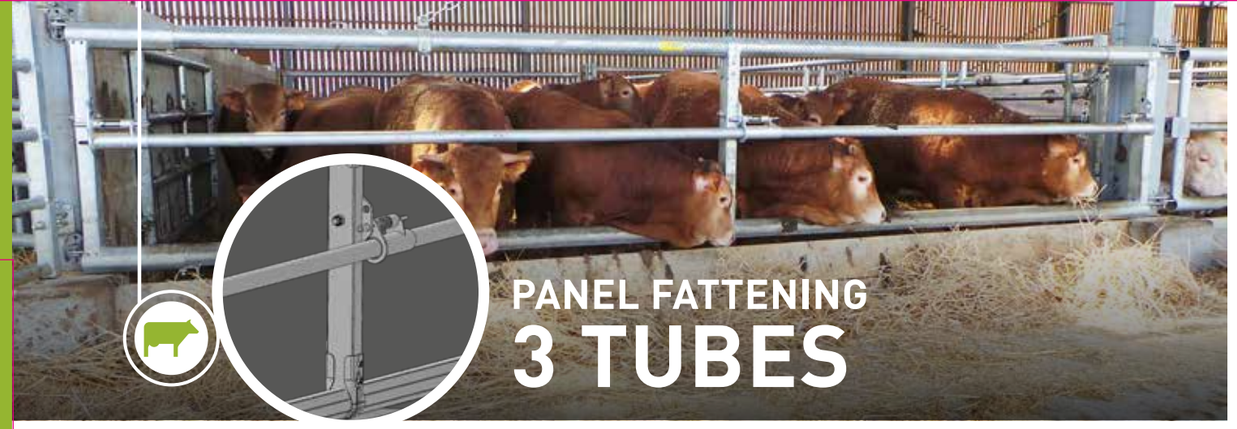

PANEL FATTENING
3 TUBES

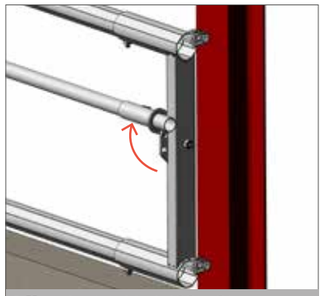

3 RD TUBE IN UPPER POSITION

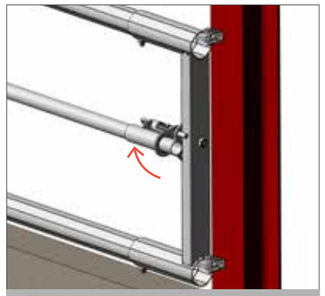

3 RD TUBE IN CENTRAL POSITION

3 RD TUBE IN LOWER POSITION

FATTENING

3 TUBES

PANEL FOR FATTENING WITH A WELD FREE FRAME 2 OCTAGONAL TUBES Ø 102 MM WITH A SPACER ⧄ 10 X 6 CM FITTED WITH CLAMPS AND 2 OCTAGONAL ENDS. Central 3rd raised simply using pins without requiring a spanner.

PE0303	Panel fattening 3 tubes L 3 m (no spacer)	(Pack x 6)	92 kg
PE0304	Panel fattening 3 tubes L. 4 m	(Pack x 6)	116 kg
PE0305	Panel fattening 3 tubes L. 5 m	(Pack x 6)	136 kg
PE0306	Panel fattening 3 tubes L. 6 m	(Pack x 6)	156 kg
RETAIL			
PE0390	End right fattening 3 tubes		18 kg
PE0391	End left fattening 3 tubes		18 kg
PE0393	Spacer fattening 3 tubes + clawed clamps		11 kg
TR9104	Tube OCTAGONAL Ø 102 L. 3.46 m T.3 mm (panel of 4 m)		26 kg
TR9105	Tube OCTAGONAL Ø 102 L. 4.46 m T.3 mm (panel of 5 m)		34 kg
TR9106	Tube OCTAGONAL Ø 102 L. 5.46 m T.3 mm (panel of 6 m)		42 kg
TU9764	Tube Ø 60 mm GALVA L. 4 m		16 kg
TU9765	Tube Ø 60 mm GALVA L. 5 m		20 kg
TU9766	Tube Ø 60 mm GALVA L. 6 m		24 kg

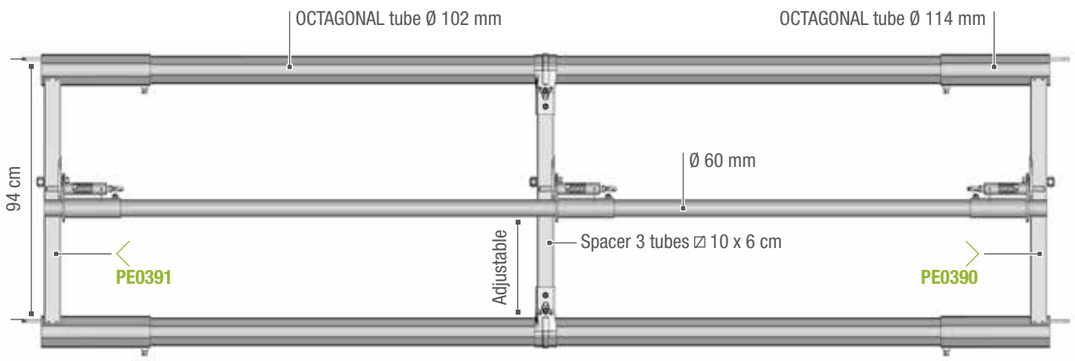

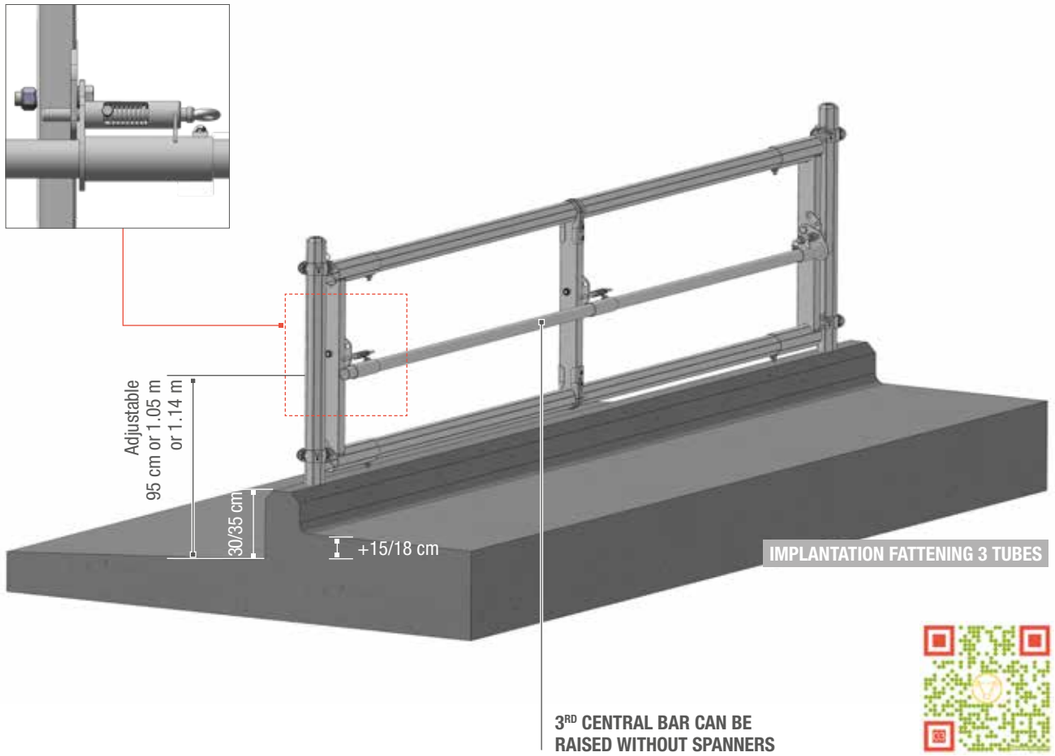

IMPLANTATION FATTENING 3 TUBES

NECK BAR
DAIRY Ø 60 MM

FITTING A NECK BAR TO AN
H PROFILE STAUNCHON

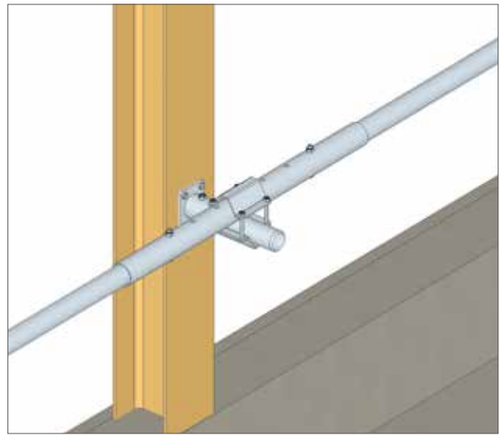

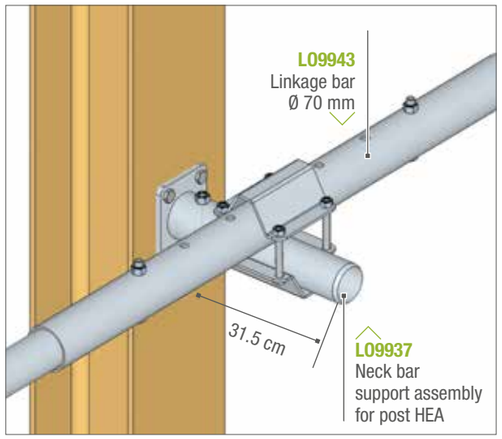

FITTING A NECK BAR TO AN
OCTAGONAL POST

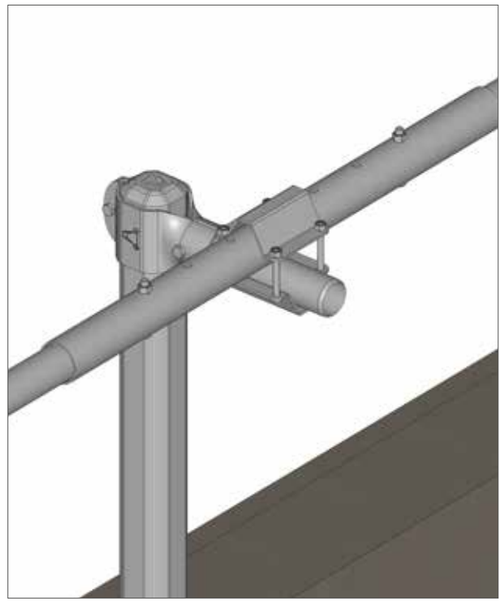

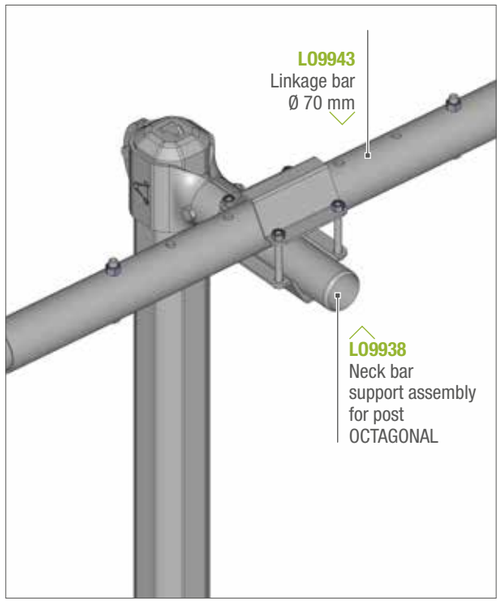

NECK BAR
DAIRY Ø 60 MM

FITTING AN OFFSET NECK BAR Ø 60 MM. FOR DAIRY COWS ONLY.

Please allow an intermediate post for bays of 5 and 6 m.

L09937	Neck bar support assembly for post HEA (composed of 1 tube + 1 BP end + 1 bracket Robust with bolt 10/80 mm)	5 kg
L09938	Neck bar support assembly for post octagonal (composed of 1 tube + 1 BP end + 1 bracket BLS with bolt 10/80 mm)	6 kg
L09943	Linkage bar Texane Ø 70 mm (to be drilled)	5 kg
TU9764	Tube Ø 60 mm GALVA L. 4 m	16 kg
TU9765	Tube Ø 60 mm GALVA L. 5 m	20 kg
TU9766	Tube Ø 60 mm GALVA L. 6 m	24 kg
TR3189	Cubicle post OCTAGONAL to bet set in Ø 102 mm L. 1.66 m	14 kg

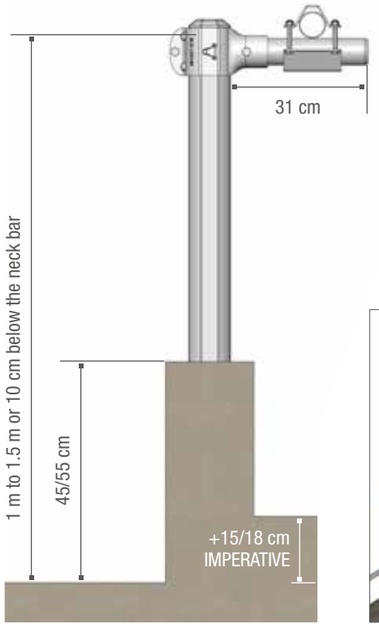

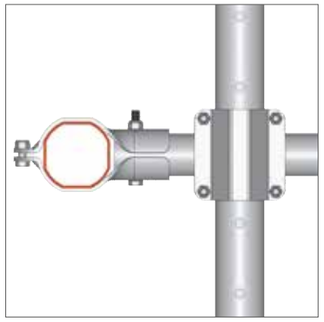

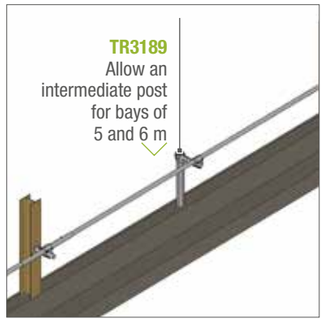

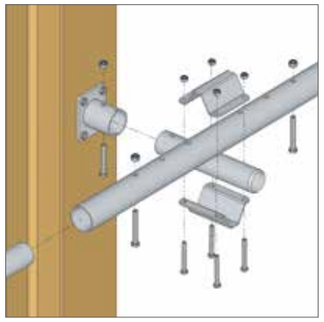

! **WARNING!**
Check direction when setting in the post.

SELF-SERVICE DIAGONAL

SELF-SERVICE KIT FORM DIAGONAL

SELF-SERVICE

DIAGONAL

DIAGONAL SELF-SERVICE PANEL LIMITING WASTAGE AT THE TROUGH.

P00406	Panel diagonal 5P. /3 m		38 kg
P00402	Panel diagonal 8P. /4 m	(Pack x 6)	58 kg
P00403	Panel diagonal 10P. /5 m	(Pack x 6)	75 kg
P00404	Panel diagonal 12P. /6 m	(Pack x 6)	90 kg

SELF-SERVICE

DIAGONAL EXPORT

(WITH STANDARD ENDS NOT ASSEMBLED)

NEW

P00413	Panel diagonal 9P. /4.60 m	68 kg
P00415	Panel diagonal 10P. /4.80 m	72 kg

3 BARS DIAM 12 MM GUARDS

INSTALLATION DIAGONAL

	A
5 places per 3 m	41 cm
8 places per 4 m	36 cm
10 places per 5 m	38 cm
12 places per 6 m	39 cm

EXPORT MODEL	A
9 places per 4.60 m	38 cm
10 places per 4.80 m	36 cm

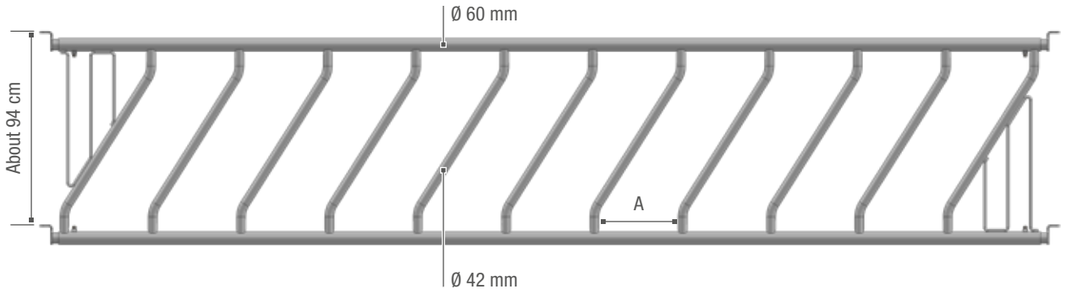

MODULE

DIAGONAL

THE MODULES ENABLE TAILOR MADE PANELS TO BE MADE UP IN ORDER TO EQUIP ALL NON-STANDARD BAYS.

P00418	Bar diagonal Ø 42.4 mm	2 kg
P00419	Bar diagonal Ø 42.4 mm with head bar	3.5 kg
SUPPORT FRAME		
M00436	Frame diagonal module 2 m - Ø 60 mm	24 kg
M00437	Frame diagonal module 3 m - Ø 60 mm	31 kg
M00438	Frame diagonal module 4 m - Ø 60 mm	38 kg
M00439	Frame diagonal module 5 m - Ø 60 mm	47 kg
M00440	Frame diagonal module 6 m - Ø 60 mm	54 kg

DIAGONAL SUPPORT FRAME MODULE

P00418
Bar diagonal
galvanised Ø 42.4 mm

P00419
Bar diagonal
Ø 42.4 mm
with head bar

	A
Adult	32 to 40 cm
Heifer	27 to 32 cm

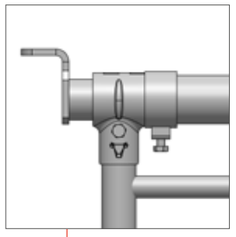

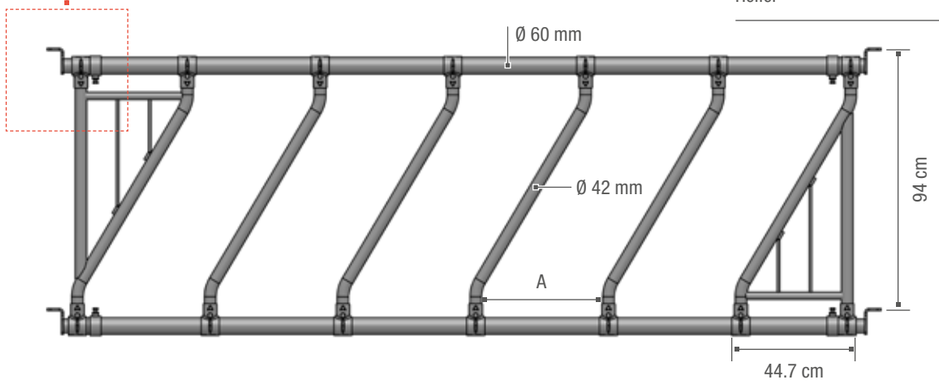

SELF-SERVICE FESTON

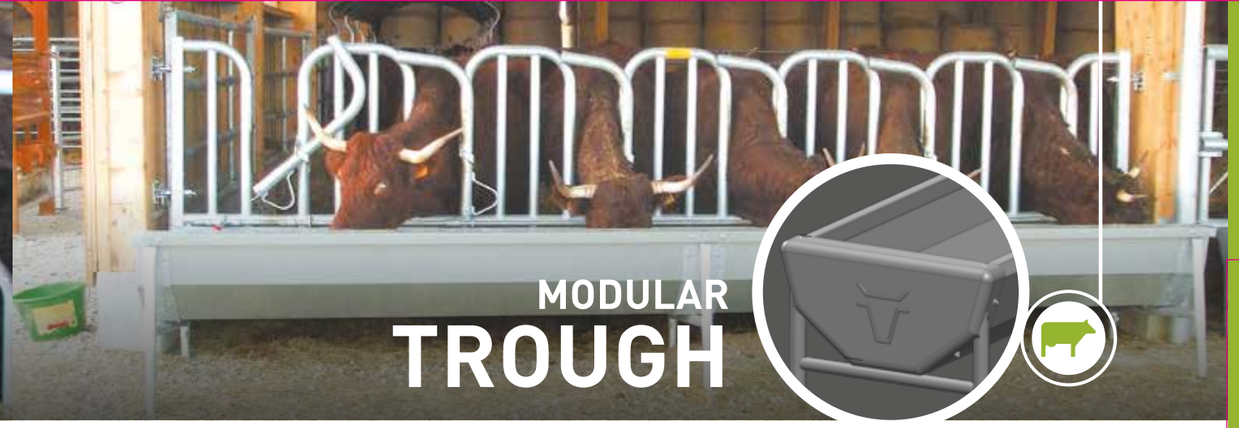

MODULAR TROUGH

SELF-SERVICE

FESTON

FESTON SELF-SERVICE PANEL LIMITING WASTAGE AT THE TROUGH.

PT0324	Panel FESTON 6 P. /4 m	(Pack x 6)	66 kg
PT0325	Panel FESTON 7 P. /5 m	(Pack x 6)	91 kg
PT0326	Panel FESTON 8 P. /6 m	(Pack x 6)	107 kg

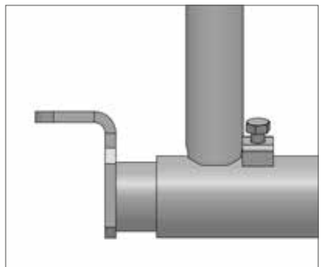

ADJUSTABLE END, RAISABLE AND SWIVELLING

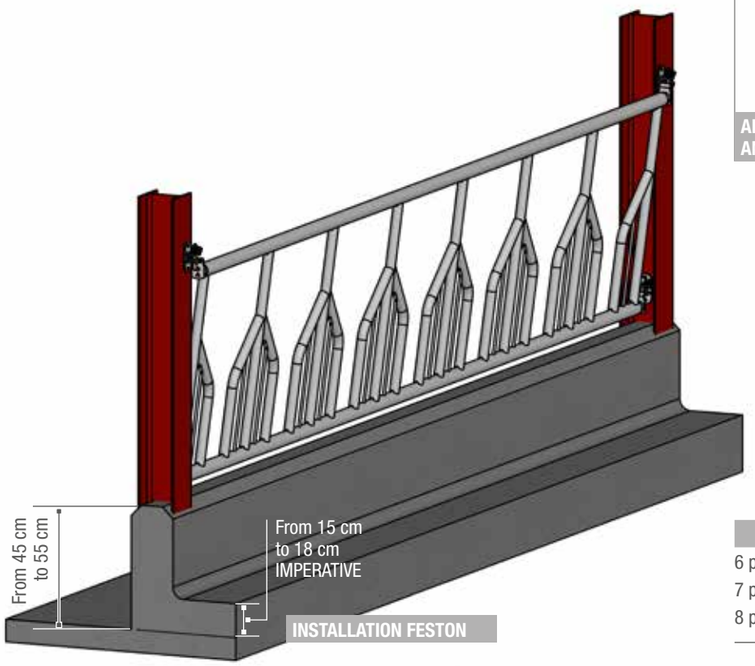

INSTALLATION FESTON

	A	B
6 places per 4 m	56 cm	23.5 cm
7 places per 5 m	62 cm	21 cm
8 places per 6 m	67 cm	24.5 cm

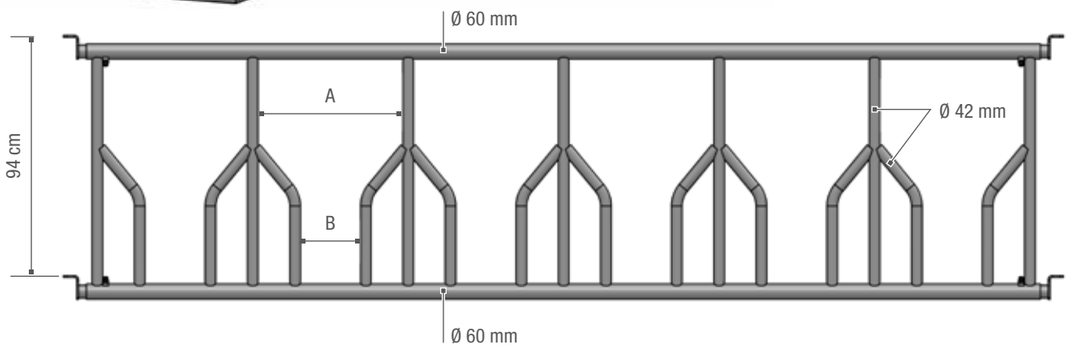

MODULAR TROUGH

GALVANISED

GALVANISED STEEL SHEET THICKNESS 20/10THS HALF ROUND SHAPE. Adjustable height and slope.

AU2211	Modular trough L. 2 m	73 kg
AU2212	Modular trough L. 2.50 m	84 kg
AU2213	Modular trough L. 4 m	130 kg
AU2214	Modular trough L. 4.50 m	141 kg
AU2215	Modular trough L. 5 m	152 kg
AU2216	Modular trough L. 6 m	187 kg
RETAIL		
AU9915	End piece	13 kg
AU9916	Intermediate stand	10 kg
AU9917	Steel sheet L. 2.50 m for modular trough	58 kg
AU9918	Steel sheet L. 2 m for modular trough	47 kg
OLD MODEL RETAIL		
AU9927	Steel sheet L. 2.50 m for modular trough old model	58 kg
AU9928	Steel sheet L. 2 m for modular trough old model	47 kg

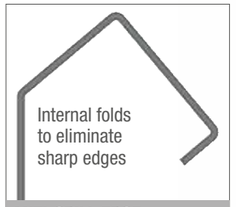

ANTI-SPILL EDGE

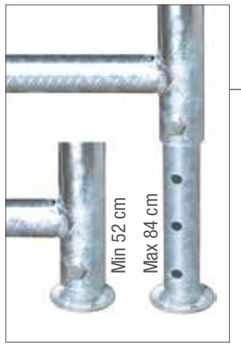

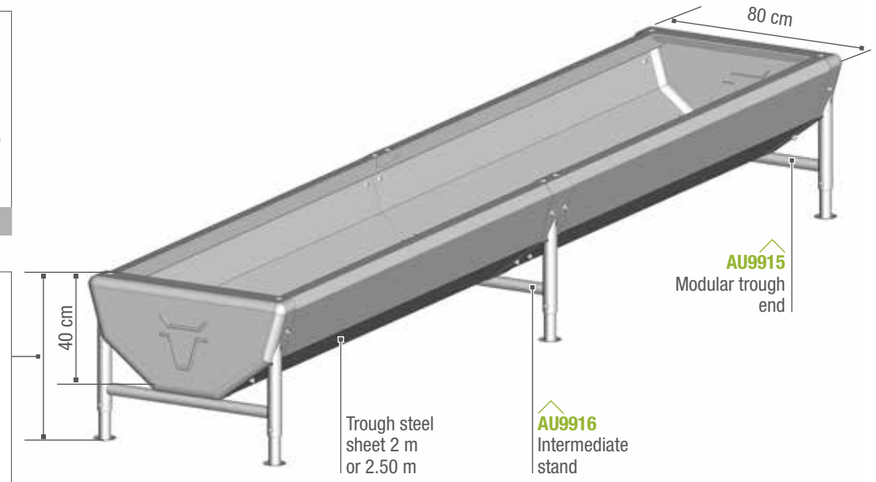

! **WARNING!** Because of the corrosion risk with silage, it is essential to apply a coat of food resin to the inside of the troughs before use, and then periodically afterwards. It is absolutely FORBIDDEN to use the bituminous paint TR0005 in troughs.

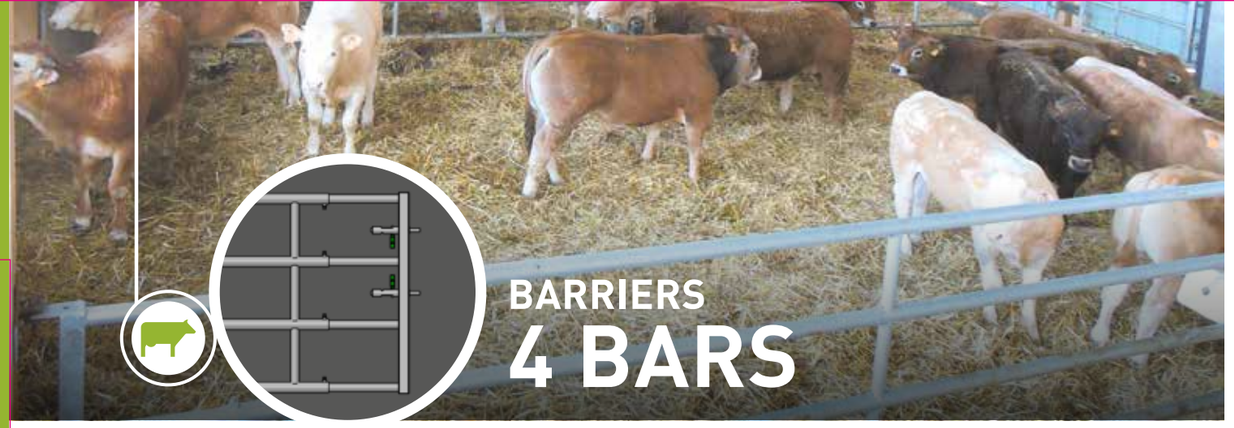

AUTOLOCK GATE EX 4

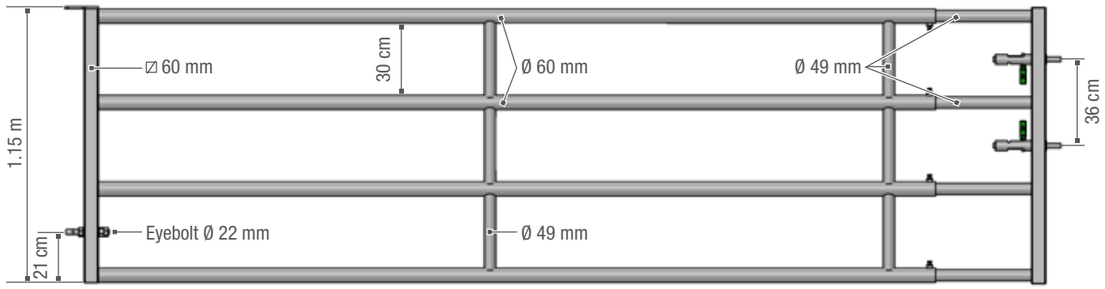

STANDARD GATE EX 4

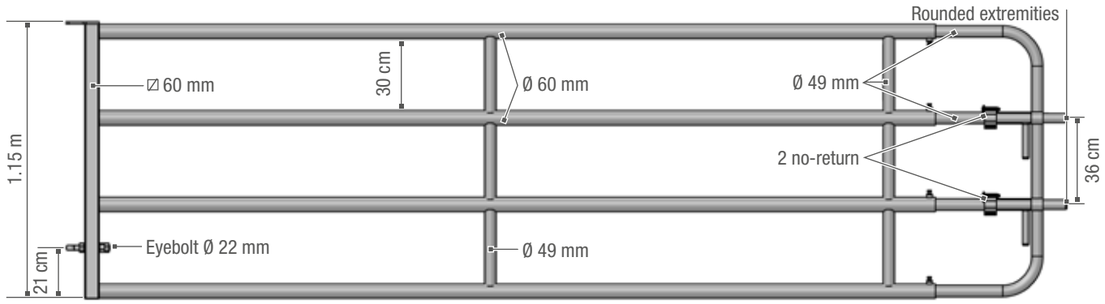

PANEL EX 4

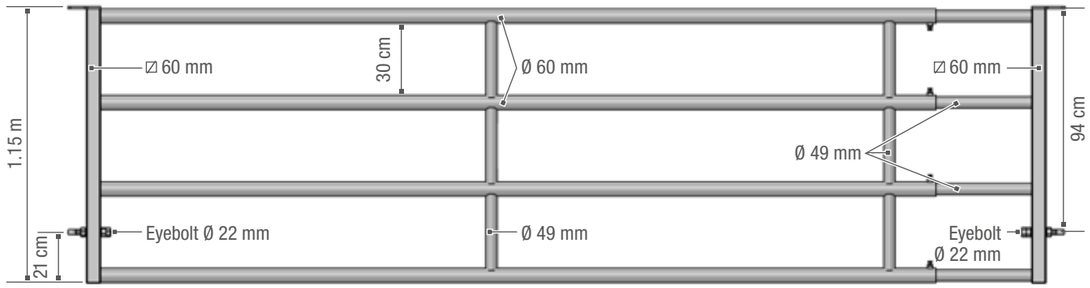

UNIQUE! TSE 275 STEELØ 60 mm. Resists flexing

TELESCOPIC BARRIER 4 BARS

Made from Ø 60 mm tube. Telescopic section Ø 49 mm tube. Spacers Ø 49 mm machined to provide a jawed end, 4 tightening points, reinforced eye bolt Ø 22 mm with 3 nuts passing through a steel bush. Raised easily by turning.

AUTOLOCK GATE EX 4		
BA1750	Gate AUTOLOCK EX4 1/2 m	46 kg
BA1751	Gate AUTOLOCK EX4 2/3 m	62 kg
BA1752	Gate AUTOLOCK EX4 3/4 m	78 kg
BA1753	Gate AUTOLOCK EX4 4/5 m	97 kg
BA1754	Gate AUTOLOCK EX4 5/6 m	111 kg
BA1755	Gate AUTOLOCK EX4 6/7 m	133 kg
STANDARD GATE EX 4		
BA1700	Gate STANDARD EX4 1/2 m	39 kg
BA1701	Gate STANDARD EX4 2/3 m	55 kg
BA1702	Gate STANDARD EX4 3/4 m	71 kg
BA1703	Gate STANDARD EX4 4/5 m	90 kg
BA1704	Gate STANDARD EX4 5/6 m	104 kg
BA1705	Gate STANDARD EX4 6/7 m	126 kg
PANEL EX 4		
BA1800	Panel EX4 1/2 m	41 kg
BA1801	Panel EX4 2/3 m	57 kg
BA1802	Panel EX4 3/4 m	73 kg
BA1803	Panel EX4 4/5 m	92 kg
BA1804	Panel EX4 5/6 m	106 kg
BA1805	Panel EX4 6/7 m	128 kg

REMEMBER!
The gates are easy to manoeuvre and recommended for places where there is frequent circulation. The panels are equipped with bolts on the two extremities. They are recommended for separating groups.The gates and panels have a common modular rear section.

BACK EX 4

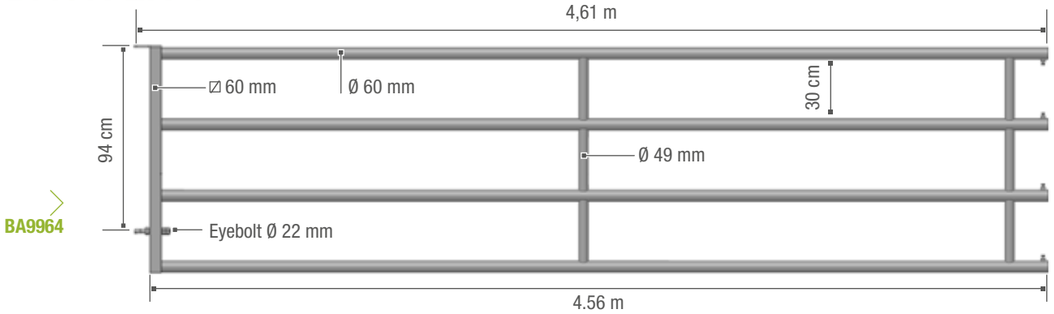

BA9964

SHORT BACK EX 4

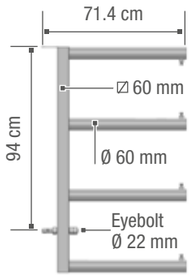

BA5010

DOUBLEX EX 4

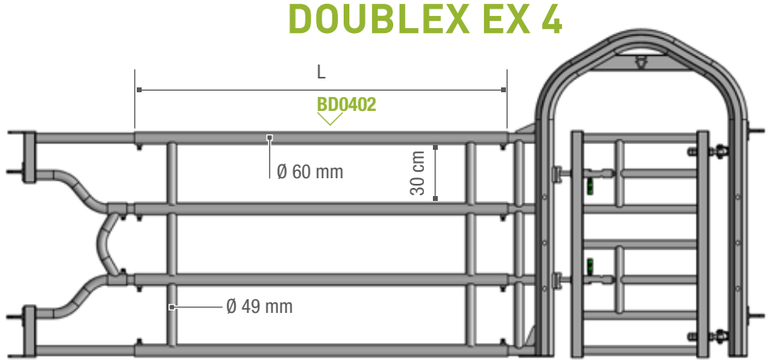

AUTOLOCK GATE FRONT EX 4

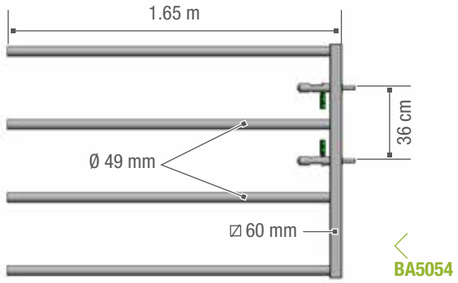

BA5054

STANDARD GATE FRONT EX 4

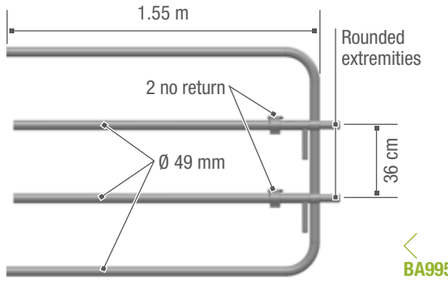

BA9959

FRONT GATE AUTOLOCK EX 4 LONG

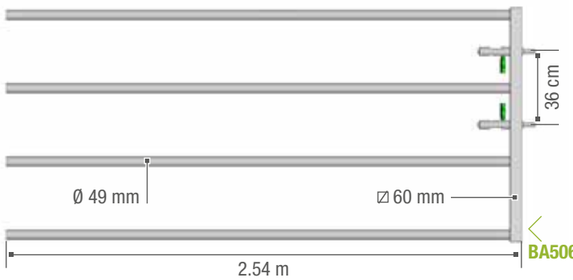

BA5064

PANEL FRONT EX 4

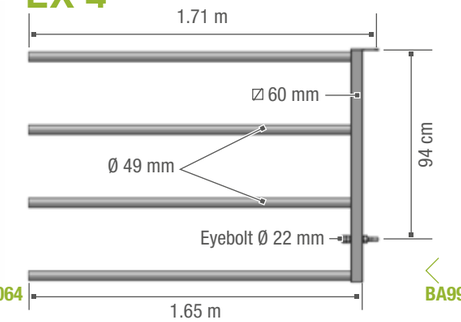

BA9960

TELESCOPIC BARRIER 4 BARS

BACK EX 4			
BA5010	Back EX 4 1/2 m (71 cm axis/pin)	(Pack x 6)	16 kg
BA9961	Back EX 4 2/3 m (1.61 m axis/pin)	(Pack x 12)	32 kg
BA9962	Back EX 4 3/4 m (2.61 m axis/pin)	(Pack x 12)	48 kg
BA9963	Back EX 4 4/5 m (3.61 m axis/pin)	(Pack x 12)	67 kg
BA9964	Back EX 4 5/6 m (4.61 m axis/pin)	(Pack x 12)	81 kg
BA9965	Back EX 4 6/7 m (5.61 m axis/pin)	(Pack x 6)	103 kg
DOUBLEX EX 4			
Central female section enables a choice of optional EX 4 male sections to be inserted at either end			
BD0401	Doublex EX 4 L. 90 cm	(Pack x 12)	19 kg
BD0402	Doublex EX 4 L. 1.90 m	(Pack x 12)	40 kg
BD0403	Doublex EX 4 L. 2.90 m	(Pack x 12)	61 kg
FRONT EX 4			
BA5054	Front gate EX 4 AUTOLOCK (1.65 m)	(Pack x 12)	30 kg
BA9959	Front gate EX 4 STANDARD (1.55 m)	(Pack x 12)	23 kg
BA9960	Front Panel EX 4 (1.71 m)	(Pack x 12)	25 kg
EXTENDED FRONT EX 4			
BA5064	Front gate AUTOLOCK EX 4 long L. 2.54 m		35 kg
BA5022	Front panel EX 4 long L. 2.54 m		36 kg

OPTIONS
BARRIER (4 BARS)

FRONT EX 4 FOR DRINKER TROUGH

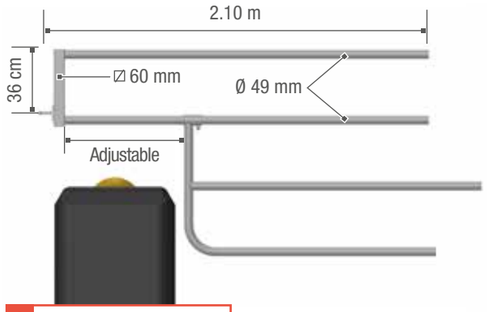

ATTENTION!
Use bar post 2.13 m with brackets.

BA5025

FRONT EX 4 RECESS FOR DRINKING BOWL

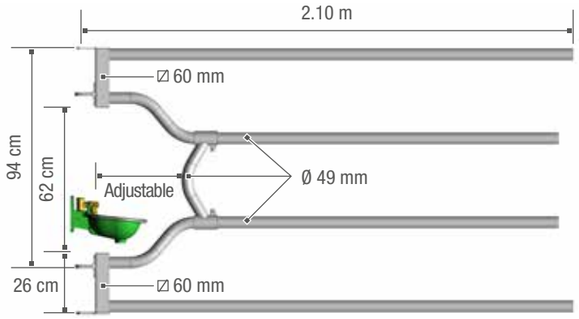

BA5035

FRONT EX 4 DUO WITH INCORPORATED GATE

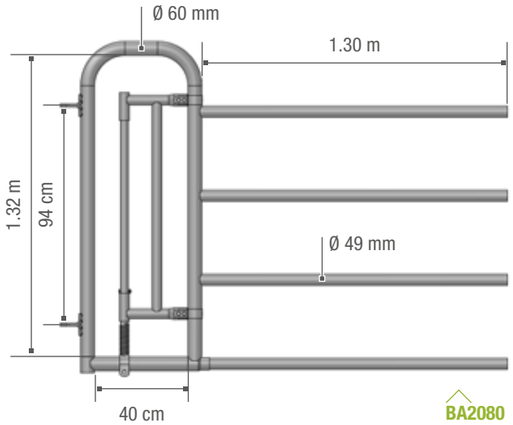

BA2080

FRONT EX 4 MAN PASSAGE

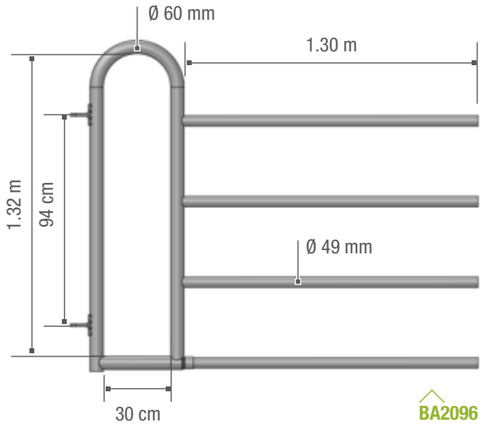

BA2096

OPTIONS 4 BARS

BA5025	Front EX 4 recess for drinker trough	(Pack x 6)	26 kg
BA5035	Front EX 4 recess for drinking bowl (drinker and stand not supplied)	(Pack x 6)	25 kg
BA2097	Front EX 4 with calf creep	(Pack x 6)	37 kg
BA2096	Front EX 4 man passage		34 kg
BA2080	Front EX 4 DUO with gate	(Pack x 6)	38 kg
BA2091	DUO gate only		7 kg
BA5000	Eyebolt Ø 22 mm + 3 nuts		0.7 kg

FRONT FOR EX 4
CALF CREEP

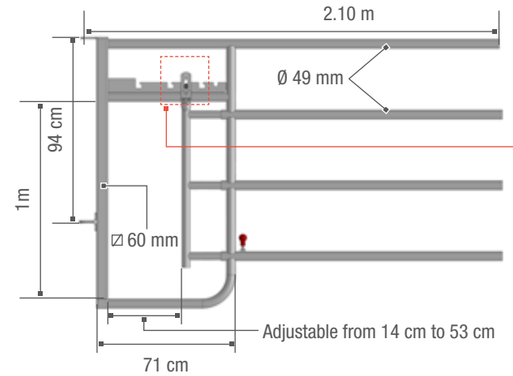

BA2097

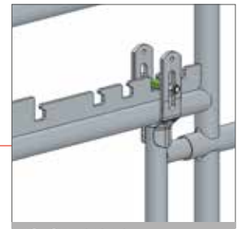

NOTCHED BAR ADJUSTMENT TO SUIT CALF SIZE OR FOR CLOSING COMPLETELY

OUR STRENGTHS
- Our barriers have spacers Ø 49 mm machined to provide a jaw shape in order to provide absolute rigidity when pushed by an animal.

REMEMBER!
Because of its fixed lower section, the calf creep only leaves from + 200 and - 400 mm of the nominal length of the panel. example: 4/5 m post centre to centre becomes 4.60 / 5.20 m.

All the posts will be Standard EX, EXCEPT the EX 4 front for the (BA5025) drinker which will require a BARE post + brackets.

WESTERN PASSAGE WITH

GATE WITH DOUBLE ANTI RETURN

BA2182

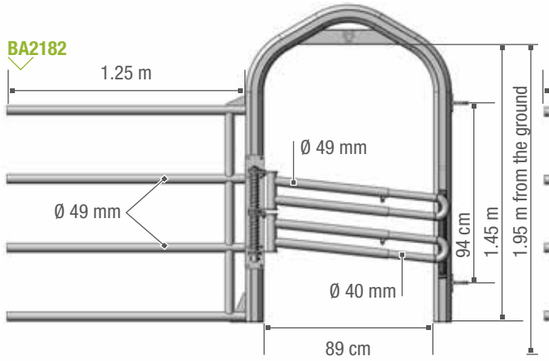

WESTERN PASSAGE WITH

COMPLETE GATE WITH FINGERS

YouTube ENTER JOURDAIN

BA2181

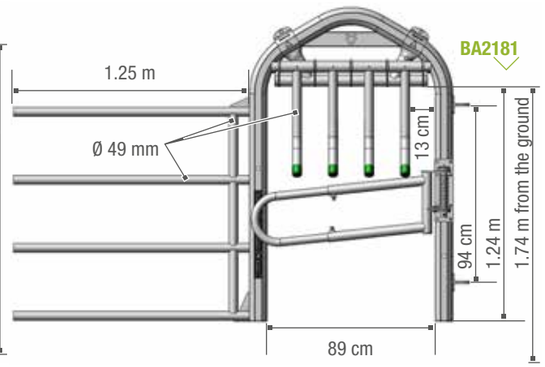

WIDE PASSAGE

SOMMETS 2017

YouTube ENTER JOURDAIN

BA2174

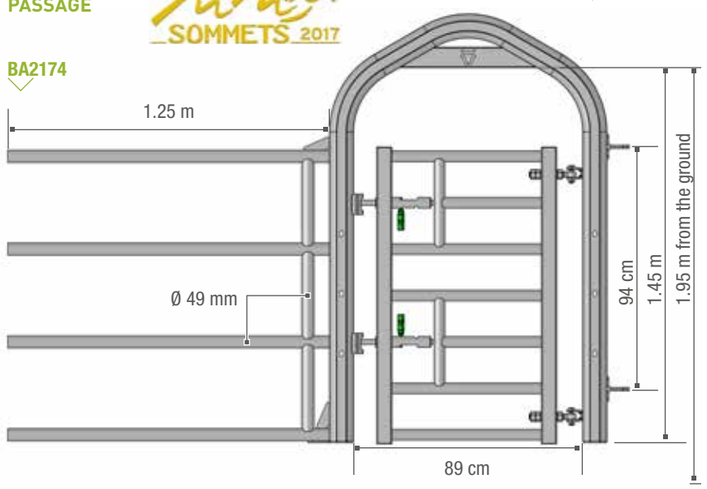

PLATE

DRINKER SUPPORT

FE2148
Steel plate for attaching a drinker to a barrier

RAISABLE BAR

BA2101

BAR IN

LOWER POSITION

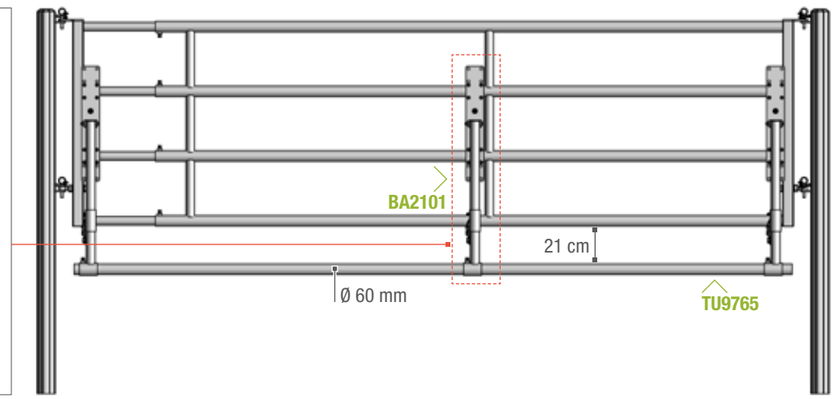

WESTERN

PASSAGE EX 4

Very tough frame in octagonal profile tube Ø 102 mm.
The no return passage has been designed for use uniquely with robot milking machines. Not to be used as a partition.

BA2182	Front EX 4 WESTERN passage no-return gate double	(Pack x 6)	77 kg
BA2181	Front EX 4 WESTERN passage with gate finger	(Pack x 6)	90 kg
BA2095	Front EX 4 WESTERN passage without gate		53 kg
BA2195	No-return gate double	(Pack x 6)	24 kg
BA2197	No-return gate finger (top+bottom part)	(Pack x 6)	37 kg
BA2194	No-return gate single	(Pack x 6)	14 kg
BA2198	Top part of gate finger	(Pack x 6)	23 kg

WIDE

PASSAGE EX 4

Very tough frame in octagonal profile tube Ø 102 mm. Wide version of the small gate with two AUTOLOCK bolts enabling both the stockman and the animals the pass through safely. Not recommended for fattening systems. Avoid lengths of over 5 m.

BA2174	Front EX 4 wide passage with small gate	(Pack x 6)	79 kg
BA2178	Small gate for wide passage		23 kg

FITTING

BARRIER MOUNTED DRINKER

Back plate suitable for EX 4 and EX 5 barriers. For an EX 4 ; Remember to cut the plate for animal safety.

FE2148	Steel plate for attaching a drinker to a barrier (delivered with 4 U bolts Ø 60 mm)	5.3 kg

RAISABLE BAR FOR

EX 4 AND EX 5 BARRIERS

Raisable bracket for attaching a supplementary Ø 60 mm bar, in order to prevent young animals from going under the barrier. As the bedding rises, the bar can be attached in the raised position. Allow two BA2101 brackets for up to 3 m. For sizes greater than that, allow three brackets.

BA2101	Raisable bracket for barrier	7 kg
TU9764	Tube Ø 60 mm 4 m	16 kg
TU9765	Tube Ø 60 mm 5 m	20 kg
TU9766	Tube Ø 60 mm 6 m	24 kg

BA2195

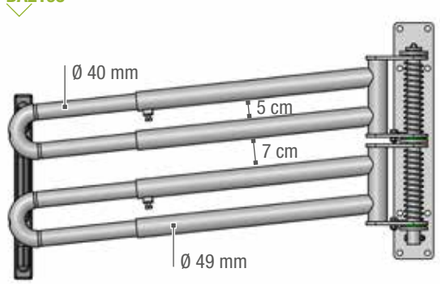

BA2197 - Complete gate with fingers

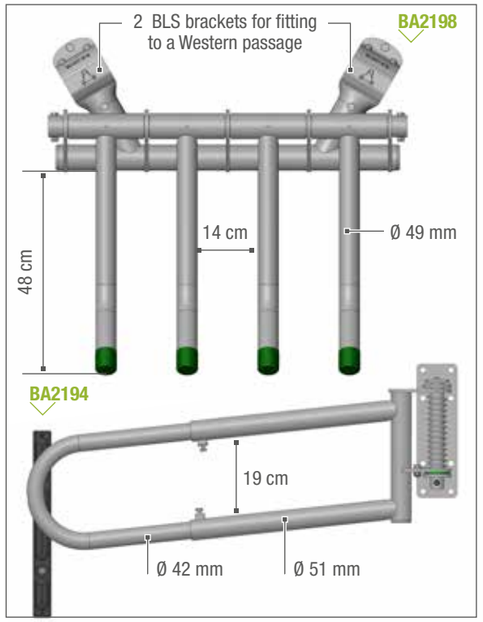

AUTOLOCK GATE EX 5

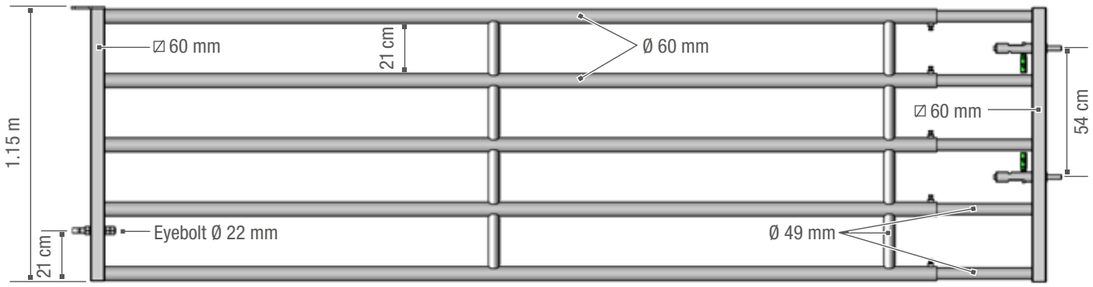

STANDARD GATE EX 5

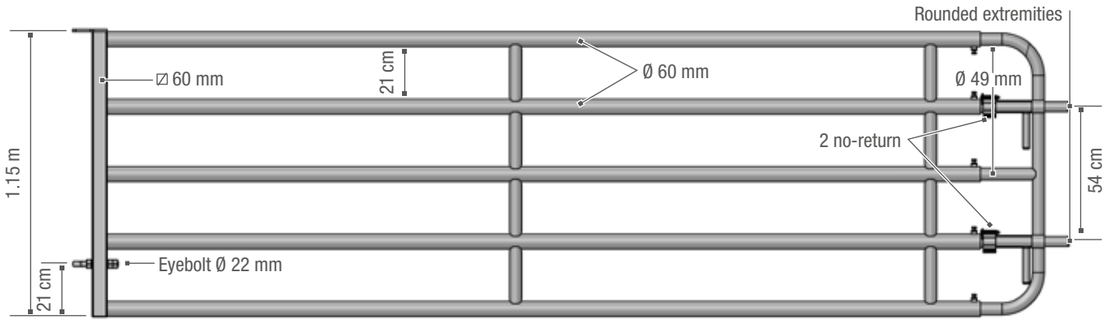

PANEL EX 5

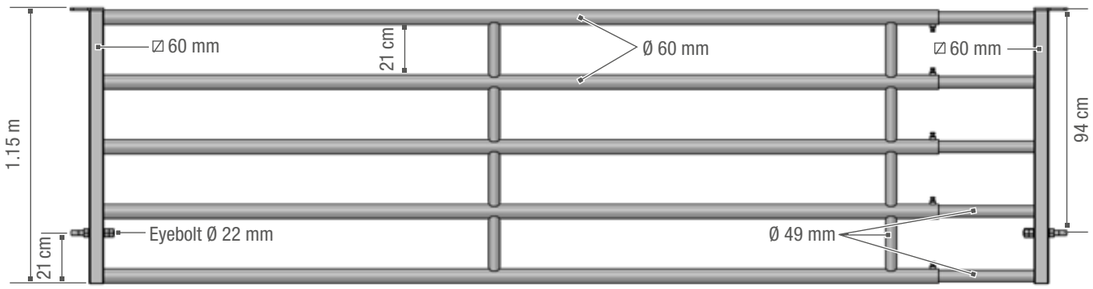

UNIQUE! TSE 275 STEEL Ø 60 mm. Resists flexing

TELESCOPIC BARRIER 5 BARS

Made from Ø 60 mm tube. Telescopic section Ø 49 mm tube. Spacers Ø 49 mm machined to provide a jawed end, 4 tightening points, reinforced eye bolt Ø 22 mm with 3 nuts passing through a steel bush. Raised easily by turning.

AUTOLOCK GATE EX 5		
BA1950	Gate AUTOLOCK EX 5 1/2 m	53 kg
BA1951	Gate AUTOLOCK EX 5 2/3 m	73 kg
BA1952	Gate AUTOLOCK EX 5 3/4 m	93 kg
BA1953	Gate AUTOLOCK EX 5 4/5 m	115 kg
BA1954	Gate AUTOLOCK EX 5 5/6 m	136 kg
BA1955	Gate AUTOLOCK EX 5 6/7 m	158 kg
STANDARD GATE EX 5		
BA1900	Gate STANDARD EX 5 1/2 m	45 kg
BA1901	Gate STANDARD EX 5 2/3 m	65 kg
BA1902	Gate STANDARD EX 5 3/4 m	85 kg
BA1903	Gate STANDARD EX 5 4/5 m	107 kg
BA1904	Gate STANDARD EX 5 5/6 m	128 kg
BA1905	Gate STANDARD EX 5 6/7 m	150 kg
PANEL EX 5		
BA2000	Panel EX 5 1/2 m	48 kg
BA2001	Panel EX 5 2/3 m	67 kg
BA2002	Panel EX 5 3/4 m	87 kg
BA2003	Panel EX 5 4/5 m	110 kg
BA2004	Panel EX 5 5/6 m	130 kg
BA2005	Panel EX 5 6/7 m	152 kg

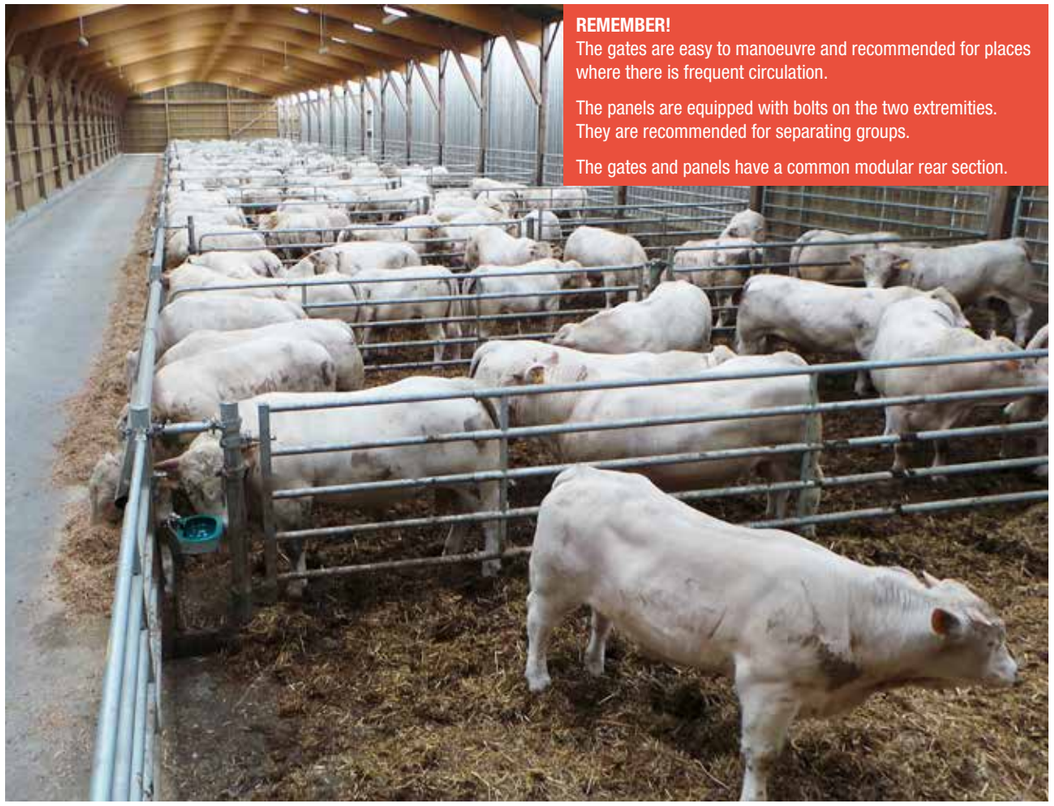

REMEMBER!
The gates are easy to manoeuvre and recommended for places where there is frequent circulation.

The panels are equipped with bolts on the two extremities. They are recommended for separating groups.

The gates and panels have a common modular rear section.

BACK EX 5

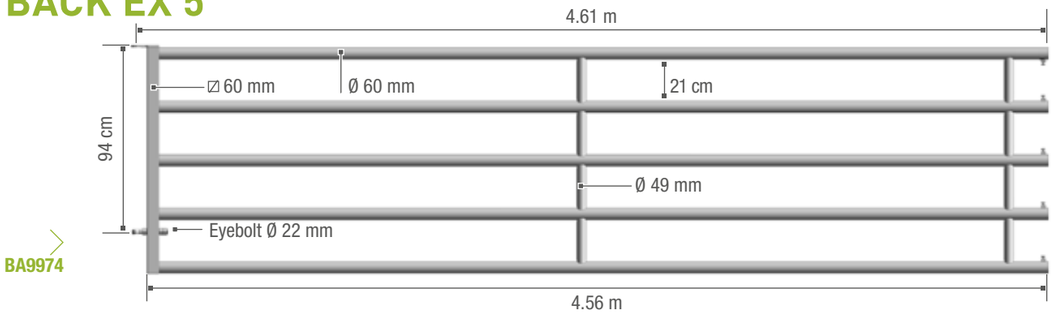

SHORT BACK EX 5

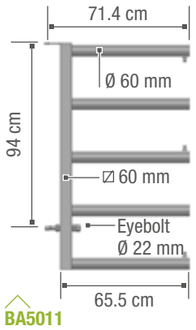

DOUBLEX EX 5

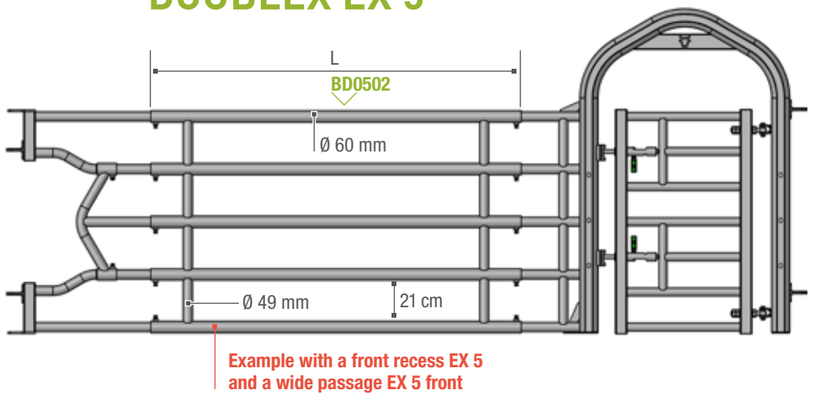

BACK EX 5 VET 3 IN 1

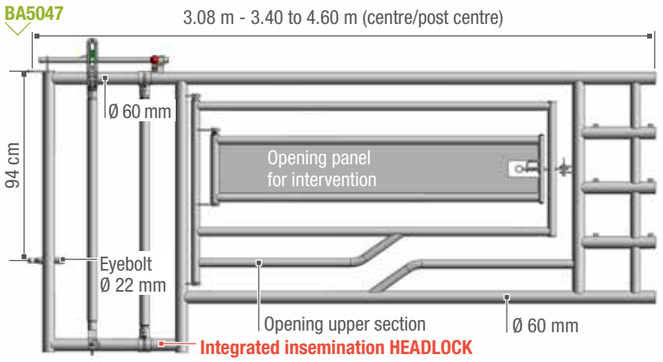

GATE FRONT AUTOLOCK EX 5

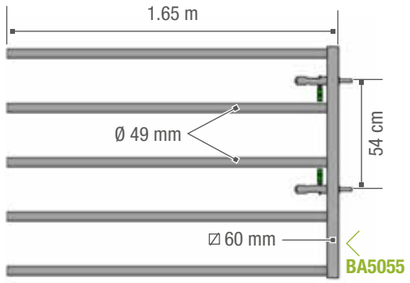

GATE FRONT STANDARD EX 5

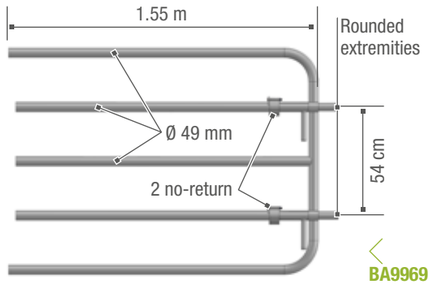

PANEL FRONT EX 5

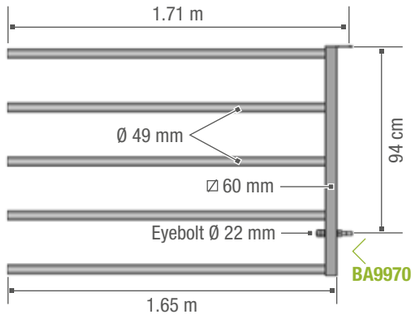

BARRIER

TELESCOPIC 5 BARS

BACK EX 5			
BA5011	Back EX 5 1/2 m (71 cm axis/pin)	(Pack x 6)	18 kg
BA9971	Back EX 5 2/3 m (1.61 m axis/pin)	(Pack x 12)	38 kg
BA9972	Back EX 5 3/4 m (2.61 m axis/pin)	(Pack x 12)	58 kg
BA9973	Back EX 5 4/5 m (3.61 m axis/pin)	(Pack x 12)	80 kg
BA9974	Back EX 5 5/6 m (4.61 m axis/pin)	(Pack x 12)	101 kg
BA9975	Back EX 5 6/7 m (5.61 m axis/pin)	(Pack x 6)	123 kg
BACK EX 5 "VET 3 IN 1"			
Partition for treatment pen with an insemination headlock, and opening upper section for Caesareans with an EX 5 back. From 3.41 to 4.60 m (centre/post centre)			
BA5047	BACK EX 5 "VET 3 IN 1"		85 kg
DOUBLEX EX 5			
Female central section enabling a male section from the list of EX 5 options to be inserted at either end			
BD0501	Doublex EX 5 L. 90 cm	(Pack x 12)	22 kg
BD0502	Doublex EX 5 L.1.90 m	(Pack x 12)	47 kg
BD0503	Doublex EX 5 L. 2.90m	(Pack x 12)	71 kg
FRONT EX 5			
BA5055	Front gate AUTOLOCK EX 5 (1.65 m)	(Pack x 12)	35 kg
BA9969	Front gate STANDARD EX 5 (1.65 m)	(Pack x 12)	27 kg
BA9970	Front panel EX 5 (1.71 m)	(Pack x 12)	30 kg
EXTENDED EX 5			
BA5065	Front gate AUTOLOCK EX 5 long L. 2.54 m		41 kg
BA5023	Front panel EX 5 long L. 2.54 m		42 kg

FRONT GATE AUTOLOCK EX 5 LONG

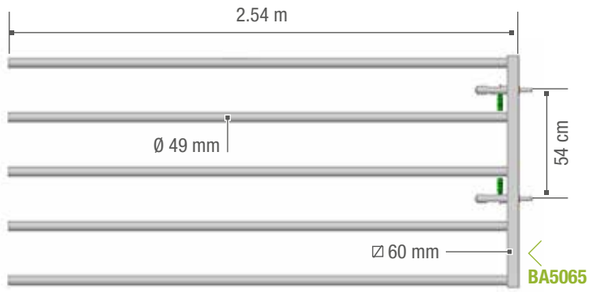

OPTIONS
GATES (5 BARS)

FRONT EX 5 FOR
DRINKER TROUGH

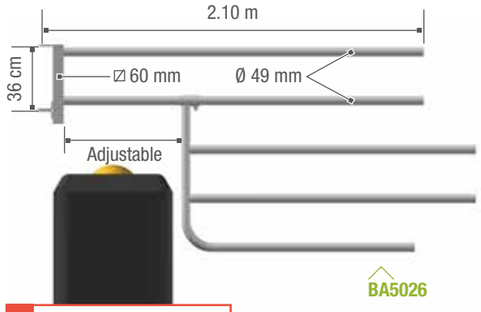

IMPORTANT!
Use bare post 2.13 m with brackets.

FRONT EX 5
RECESS FOR DRINKING BOWL

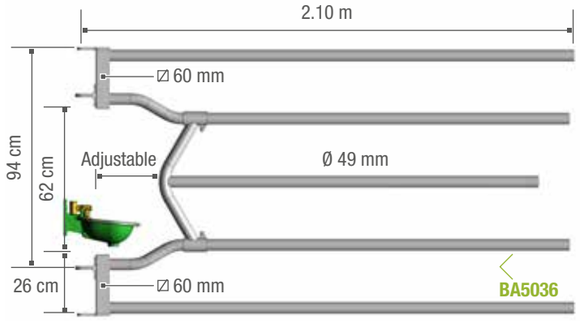

FRONT EX 5 DUO WITH
INCORPO-RATED GATE

BA2090

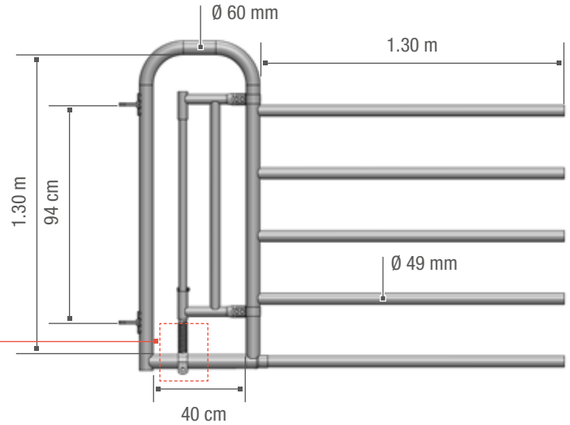

FRONT EX 5
CALF CREEP

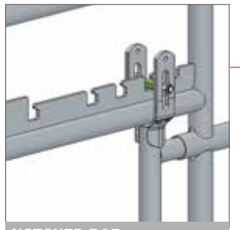

BA2098

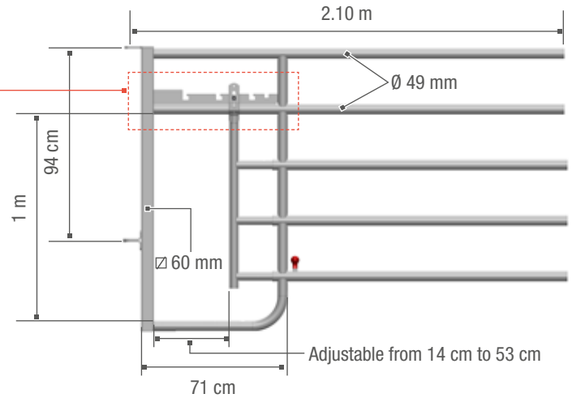

OPTIONS
5 BARS

BA5026	Front EX 5 recess for drinker trough L. 2.05m	(Pack x 6)	30 kg
BA5036	Front EX 5 recess for drinking bowl L. 2.05m (drinker and stand not supplied)	(Pack x 6)	29 kg
BA2098	Front EX 5 with calf creep with instantaneous rack based adjustment	(Pack x 6)	40 kg
BA2090	Front EX 5 DUO with gate	(Pack x 6)	42 kg
BA2091	DUO gate only		7 kg
BA5000	Eyebolt Ø 22 mm + 3 nuts		0.7 kg

OUR STRENGTHS
- Our barriers have spacers Ø 49 mm machined to provide a jaw shape in order to provide absolute rigidity when pushed by animal.
- The calf creep and drinker opening are easy to use and very strong (the lower section is supported by the upper section.)

REMEMBER!
Because of its fixed lower section, the calf creep only leaves from + 200 and - 400 mm of the nominal length of the panel. example: 4/5 m post centre to centre becomes 4.60 / 5.20 m.

All the posts will be Standard EX, EXCEPT the EX 5 front for the (BA5026) drinker which will require a BARE post + brackets.

WIDE
PASSAGE

YouTube ENTER JOURDAIN

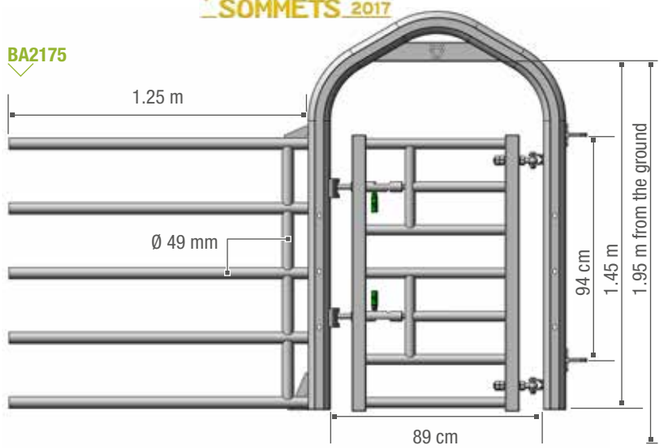

SMALL GATE
FOR WIDE PASSAGE

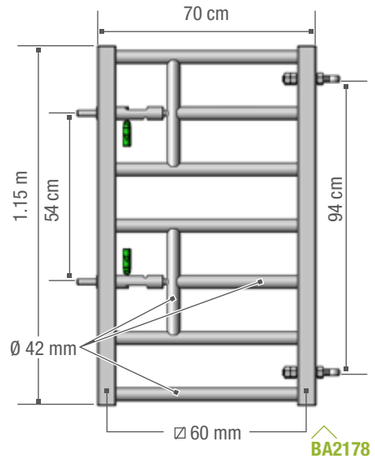

PLATE
DRINKER SUPPORT

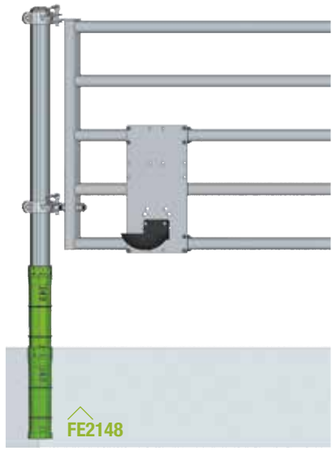

RAISABLE
BAR

BAR IN
LOWER POSITION

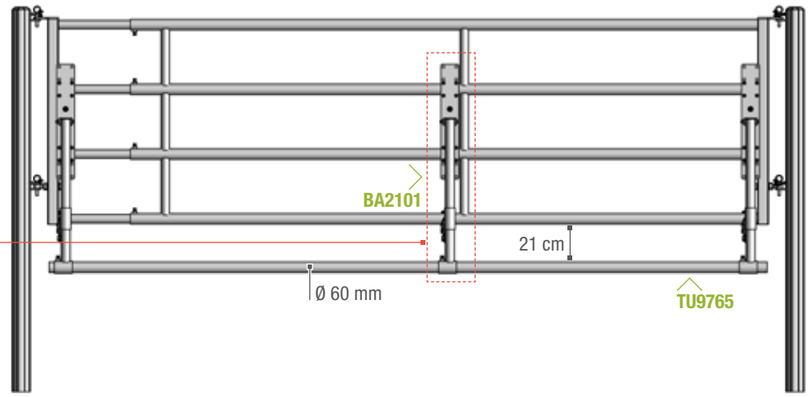

WIDE
PASSAGE EX 5

Very tough frame in octagonal profile tube Ø 102 mm. Wide version of the small gate with two AUTOLOCK bolts enabling both the stockman and the animals the pass through safely. Not recommended for fattening systems. Avoid lengths of over 5 m.

BA2175	Front EX 5 wide passage with small gate	(Pack x 6)	85 kg
BA2178	Small gate for wide passage		23 kg

FITTING
BARRIER MOUNTED DRINKER

Back plate suitable for EX 4 and EX 5 barriers. For an EX 4 ; remember to cut the plate for animal safety.

FE2148	Steel plate for attaching a drinker to a barrier (Delivered with 4 u-bolts ø 60 mm)	5.3 kg

RAISABLE BAR FOR
EX 4 AND EX 5 BARRIERS

Raisable bracket for attaching a supplementary Ø 60 mm bar, in order to prevent young animals from going under the barrier. As the bedding rises, the bar can be attached in the raised position. Allow two BA2101 brackets for up to 3 m. For sizes greater than that, allow three brackets.

BA2101	Raisable bracket for barrier	7 kg
TU9764	Tube Ø 60 mm 4 m	16 kg
TU9765	Tube Ø 60 mm 5 m	20 kg
TU9766	Tube Ø 60 mm 6 m	24 kg

SMALL GATE 5 BARS

GATE

TELESCOPIC 5 BARS

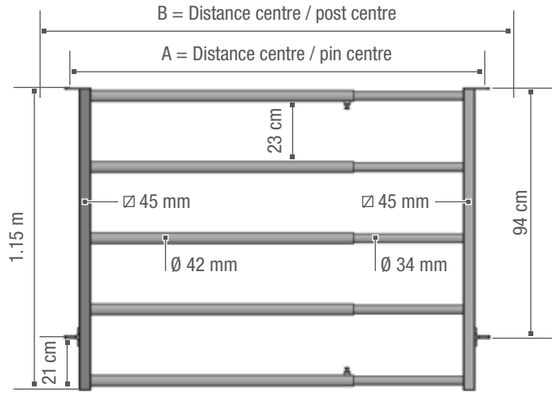

PN4607

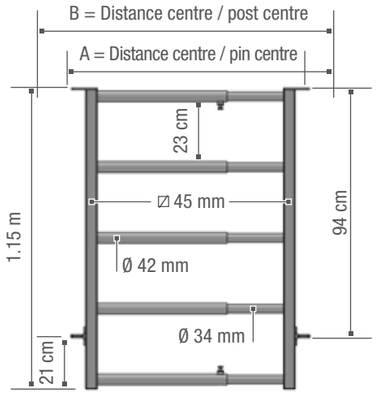

PN4605

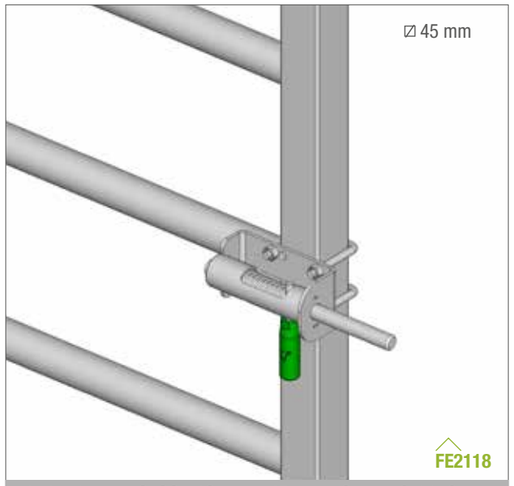

FE2118

ADAPTABLE AUTOLOCK BOLT + ⧄ 45 MM MOUNTING BRACKET

PN9982

ADAPTABLE BOLT STANDARD

For mounting an AUTOLOCK bolt on an EX panel front, please order a SAC 134 as well: 2 U bolts 60 mm

GATE

TELESCOPIC 5 BARS

PN4605	Gate EX 5 60/100 cm		18 kg
PN4607	Gate EX 5 110/150 cm		24 kg
PN4680	Front gate EX 5 long 60 cm	(Pack x 7)	7 kg
PN4685	Back EX 5 60/100 cm	(Pack x 7)	10 kg
PN4687	Back EX 5 110/150 cm	(Pack x 7)	15 kg
ACCESSORIES FOR 5 BAR GATES			
FE2118	Adaptable AUTOLOCK bolt + ⧄ 45 mm mounting bracket	(Pack x 10)	2 kg
PN9982	Adaptable bolt standard		2.5 kg

GATE	A: MINI	MAXI (IN MM)	B: MINI	MAXI (IN MM)
60 / 100 cm	68 cm	1.07 m	87 cm	1.27 m
110 / 150 cm	1.17 m	1.57 m	1.37 m	1.77 m

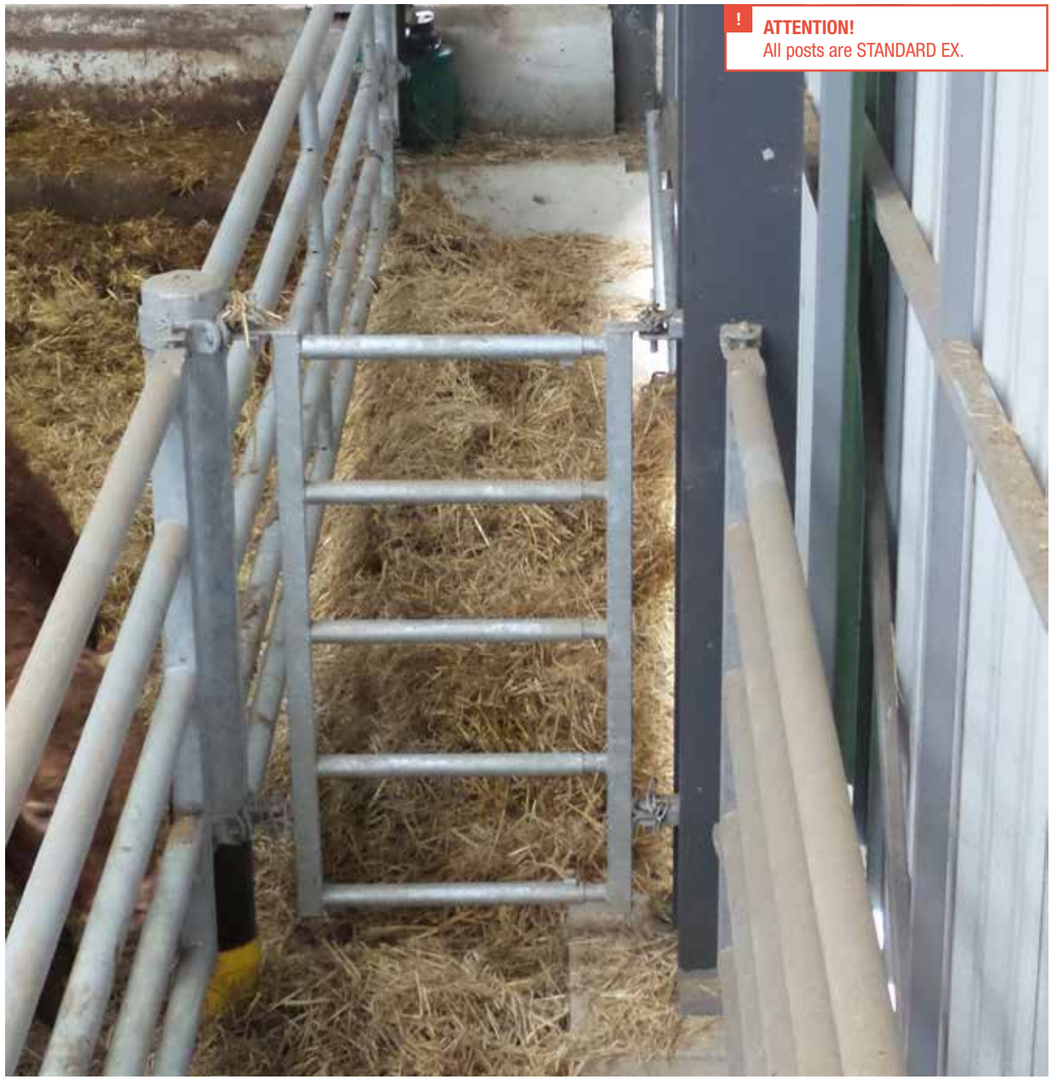

ATTENTION!
All posts are STANDARD EX.

FIELD
GATE

FIELD GATE WITH CENTRAL BOLT

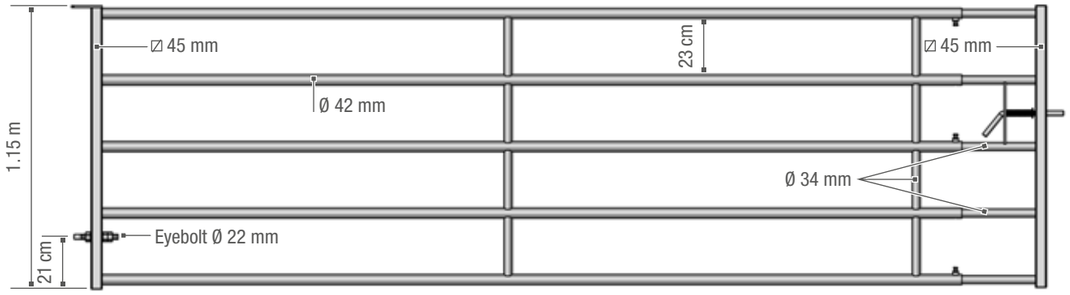

FIELD GATE STANDARD

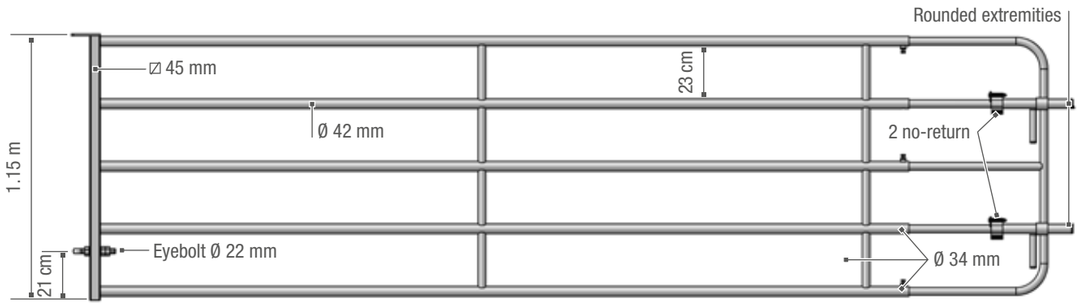

FIELD PANEL

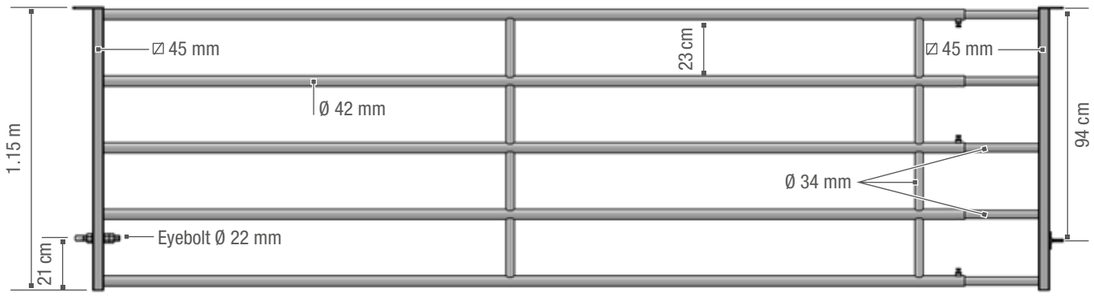

FIELD
BARRIER

Made from Ø 42 mm tube. Telescopic section Ø 34 mm. Spacers Ø 34 mm machined to provide a jawed end, 3 tightening points, reinforced eye bolts Ø 22 mm with 3 nuts passing through a steel bush. Raised easily by turning.

FIELD GATE WITH CENTRAL BOLT		
BH4304	Field gate with central bolt 2/3 m	42 kg
BH4305	Field gate with central bolt 3/4 m	55 kg
BH4306	Field gate with central bolt 4/5 m	70 kg
BH4307	Field gate with central bolt 5/6 m	82 kg

FIELD GATE STANDARD		
BH2300	Field gate STANDARD 2/3 m	42 kg
BH4300	Field gate STANDARD 3/4 m	53 kg
BH4301	Field gate STANDARD 4/5 m	68 kg
BH4302	Field gate STANDARD 5/6 m	80 kg

FIELD PANEL

Ideally suited for calf fattening pens.

BH4309	Field panel 2/3 m	42 kg
BH4310	Field panel 3/4 m	53 kg
BH4311	Field panel 4/5 m	68 kg
BH4312	Field panel 5/6 m	80 kg

FIELD BACK

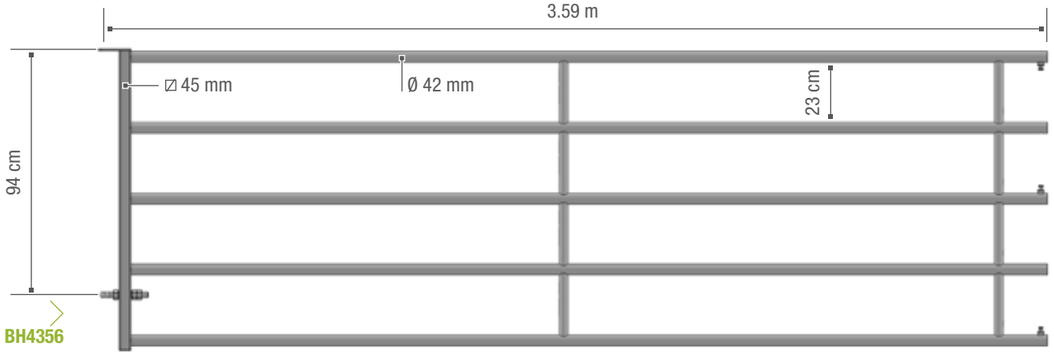

BH4356

FIELD GATE FRONT

AUTOLOCK

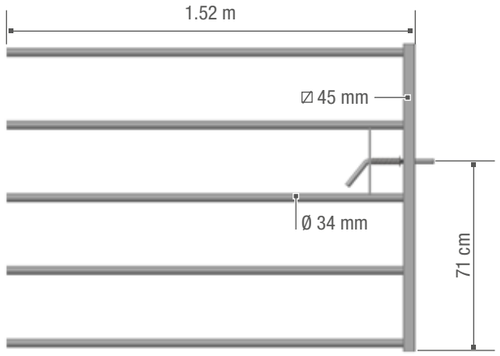

BH4353

FIELD

GATE FRONT

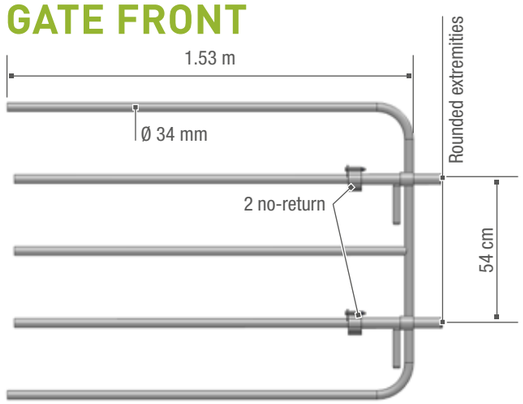

BH4350

FIELD

PANEL FRONT

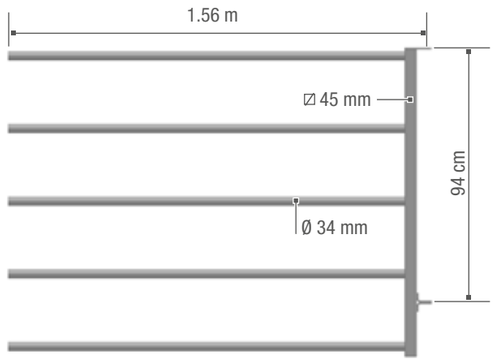

BH4351

FIELD FRONT

WITH RECESS

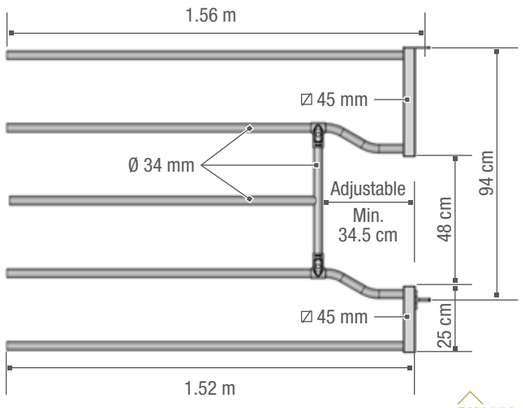

BH4352

FIELD

GATE

FIELD BACK			
BH4354	Field back 2/3 m (1.59 m axis/pin)	(Pack x 14)	22 kg
BH4355	Field back 3/4 m (2.59 m axis/pin)	(Pack x 14)	35 kg
BH4356	Field back 4/5 m (3.59 m axis/pin)	(Pack x 14)	50 kg
BH4357	Field back 5/6 m (4.59 m axis/pin)	(Pack x 14)	62 kg
FIELD FRONT			
BH4353	Field front with central bolt (1.52 m)	(Pack x 14)	20 kg
BH4350	Field gate front (1.53 m)	(Pack x 14)	18 kg
BH4351	Field panel front (1.56 m)	(Pack x 14)	18 kg
BH4352	Field panel front recess for drinker. Ideally suited for calf fattening pens (1.56 m)		18 kg

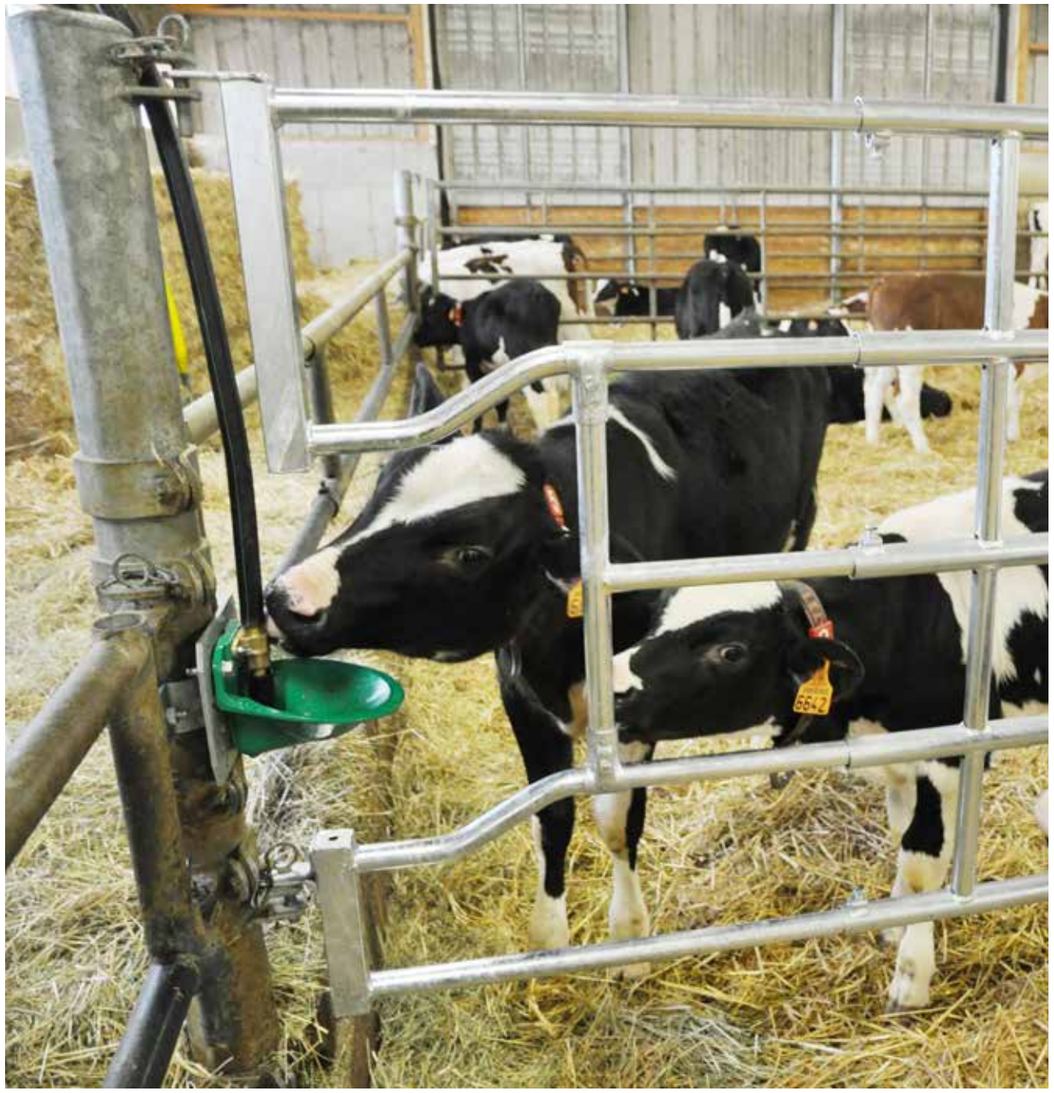

RAISABLE DIVIDING GATE

GATES FOR CUBICLES

Raisable cubicle dividing gates are made up of a steel frame with 2 guided adjustable ends on 4 rollers. A non galvanised steel counterweight slides inside an octagonal post Ø 102 mm. Please install a rope at the middle of the partition in order to lower it from the open position to the closed position. Cable locking in the closed position.

YouTube ENTER JOURDAIN

RAISABLE

CUBICLE DIVIDING GATE

LO3023	Raisable cubicle dividing gate 2.30 / 3.50 m	220 kg	NEW
LO3034	Raisable cubicle dividing gate 3.40 / 4.60 m	240 kg	NEW

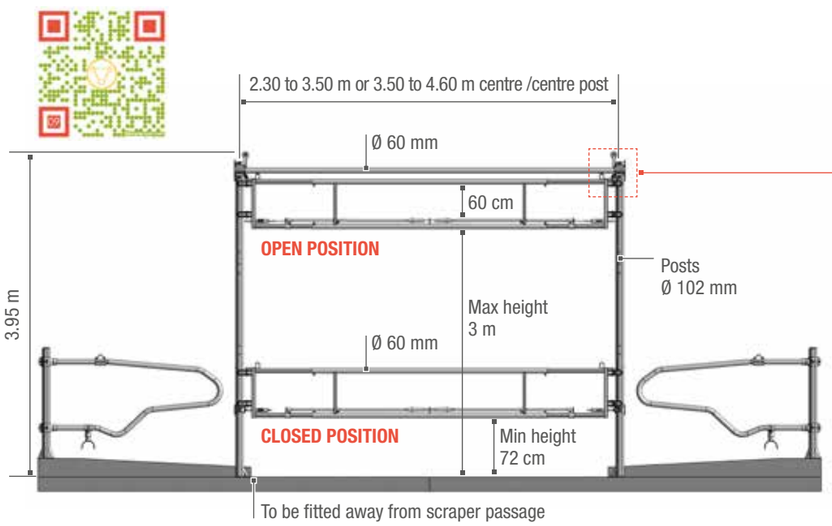

REMEMBER!
For your safety, ensure that cable tightness and wear are checked regularly.

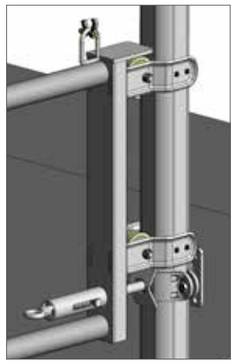

ADAPTER FOR

CUBICLE GATE

The adapter enables a telescopic 2 bars gate to be attached to the cubicle made from Ø 60 mm and Ø 49 mm tubes.

LO3194	Cubicle adapter	7 kg

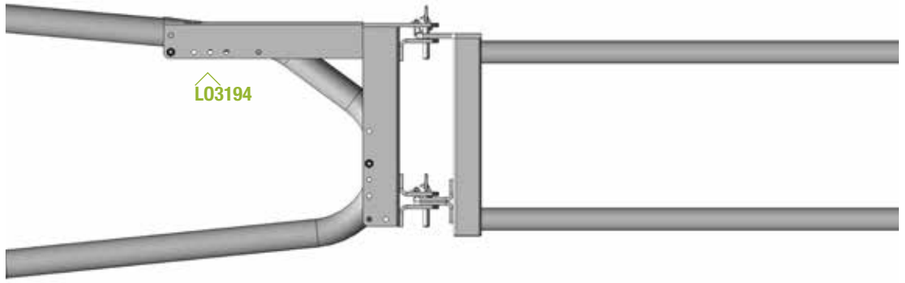

CUBICLE GATE

Back made using Ø 60 mm tube and adjustable front part Ø 49 mm tube.

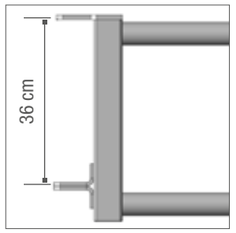

LO3195	Cubicle dividing gate 2 / 3 m (1 spacer)	26 kg
LO3196	Cubicle dividing gate 3 / 4 m (1 spacer)	34 kg
LO3197	Cubicle dividing gate 4 / 5 m (2 spacers)	42 kg
LO3198	Cubicle dividing gate 5 / 6 m (2 spacers)	50 kg

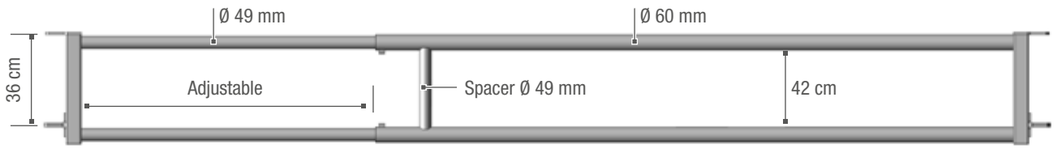

CAESAREAN
EX 5 FRONT INSEMINATION

TELESCOPIC CAESAREAN
GATE

NEW

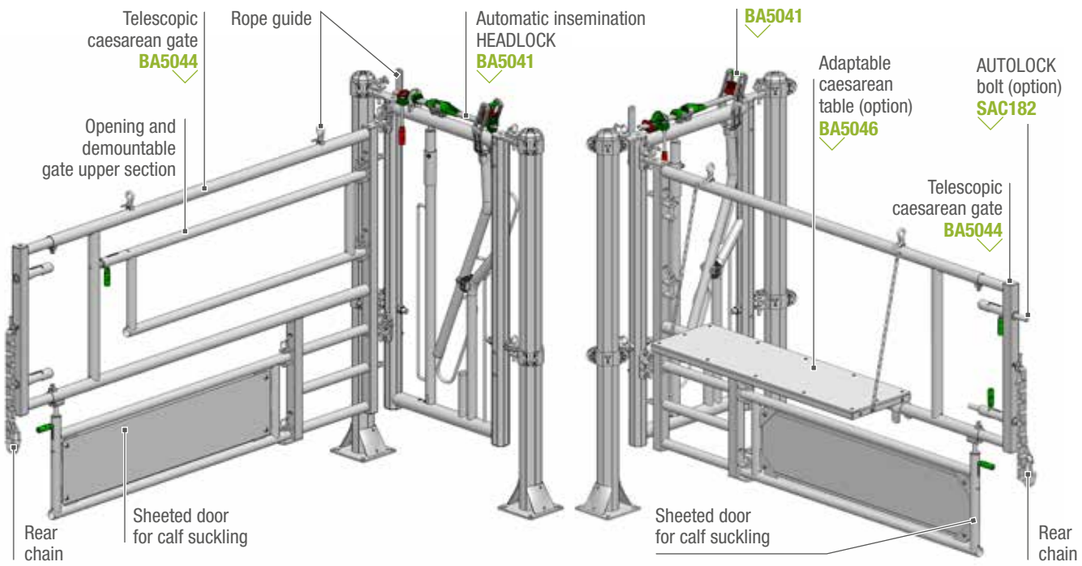

EX5 FRONT WITH
AUTOMATIC INSEMINATION HEADLOCK

NEW

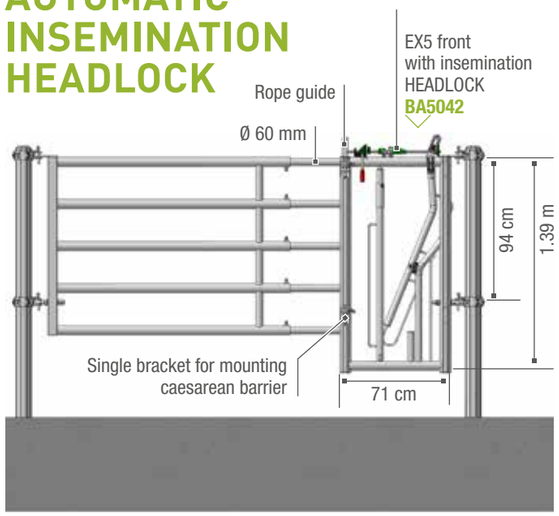

TELESCOPIC CAESAREAN
GATE

TELESCOPIC CAESAREAN GATE WITH 2 DIFFERENT MOUNTING HEIGHTS, IT CAN BE FITTED TO THE AUTOMATIC INSEMINATION HEADLOCK AND CAN EITHER BE HELD BY CHAIN OR LOCKED AGAINST AN OCTAGONAL POST BY ADDING A BRACKET AND AN AUTOLOCK BOLT. The upper gate is both openable and demountable, the lower sheeted gate is both openable and demountable in order to provide unobstructed access for calf suckling.

BA5044	Telescopic caesarean gate	65 kg	NEW
SAC182	AUTOLOCK bolt (option)	2 kg	

ADAPTABLE TABLE FOR
CAESAREAN GATE

TABLE WITH PLASTIC TOP FITTED USING A CHAIN TO THE TELESCOPIC CAESAREAN GATE. It enables the womb to be supported externally during Caesareans and also for supporting instruments. Simple to clean and disinfect.

BA5046	Adaptable Caesarean table	13.50 kg	NEW

EX 5 FRONT WITH
AUTOMATIC INSEMINATION HEADLOCK

EX 5 FRONT WITH REINFORCED AUTOMATIC INSEMINATION HEADLOCK, FITTED WITH A HALF MOON LINKAGE, LOCKING HOUSING AND COMPOSITE STOP. It has easy yoke adjustment and can be demounted using the upper handle if an animal falls. It consists of 2 octagonal tube uprights Ø 76 mm predrilled with a pair of single brackets in order to carry the Caesarean barrier. It will fit the EX 5 backs.

BA5042	EX 5 front with Axial II insemination HEADLOCK	59 kg	NEW

INSEMINATION
EX 5 VET 3 IN 1

NO RETURN FOR DAIRY PASSAGE

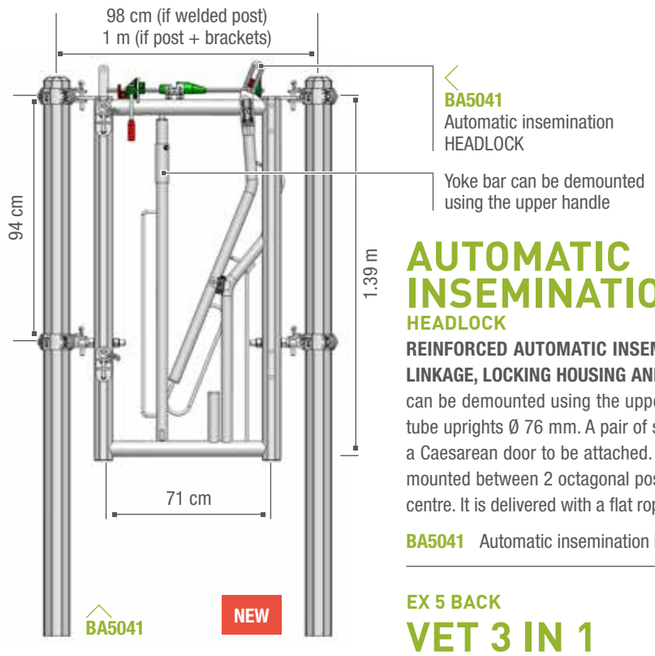

YouTube ENTER JOURDAIN

BA5041
Automatic insemination HEADLOCK

Yoke bar can be demounted using the upper handle

AUTOMATIC INSEMINATION
HEADLOCK

REINFORCED AUTOMATIC INSEMINATION HEADLOCK, FITTED WITH A HALF MOON LINKAGE, LOCKING HOUSING AND COMPOSITE STOP. It has easy yoke adjustment and can be demounted using the upper handle if an animal falls. It consists of 2 octagonal tube uprights Ø 76 mm. A pair of single brackets are attached to the upright and enable a Caesarean door to be attached. The headlock does not have adjustable ends and it is mounted between 2 octagonal posts Ø 102 mm spaced at 1 m from post centre to post centre. It is delivered with a flat rope holder (rope not supplied).

BA5041	Automatic insemination HEADLOCK 1 m	41 kg	NEW

EX 5 BACK
VET 3 IN 1

Partition for infirmary pen, comprising an insemination headlock, a top opening caesarean barrier and an EX 5 back. Front 3.41 to 4.60 m (post centre to centre).

BA5047	EX 5 back VET 3 in 1	85 kg

EX 5 BACK
VET 3 IN 1

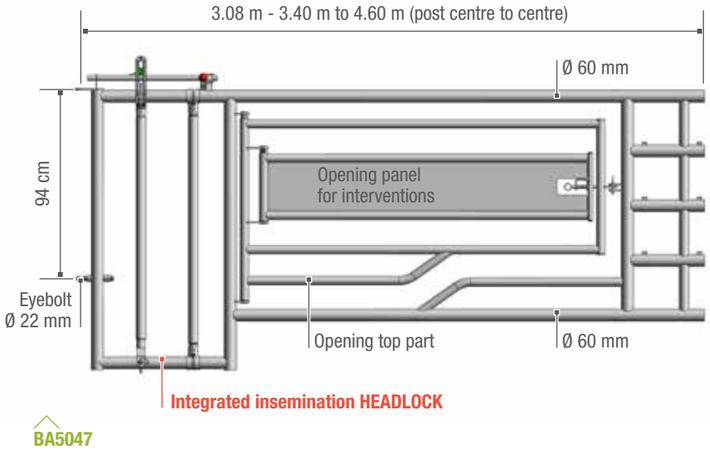

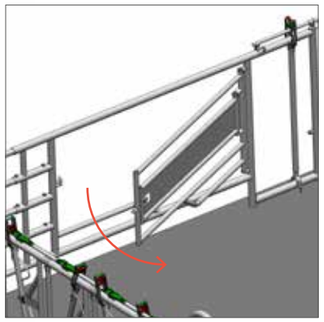

NO RETURN FOR
DAIRY PASSAGES

BA2194	No return gate single	(Pack x 6)	14 kg
BA5002	Buffer wall mounted		1.1 kg
SAC138	Round U bolt Ø 60 mm (for bar mounting)		0.25 kg
SAC134	Square U bolt ⧄ 60 mm (for mounting on square tube)		0.26 kg

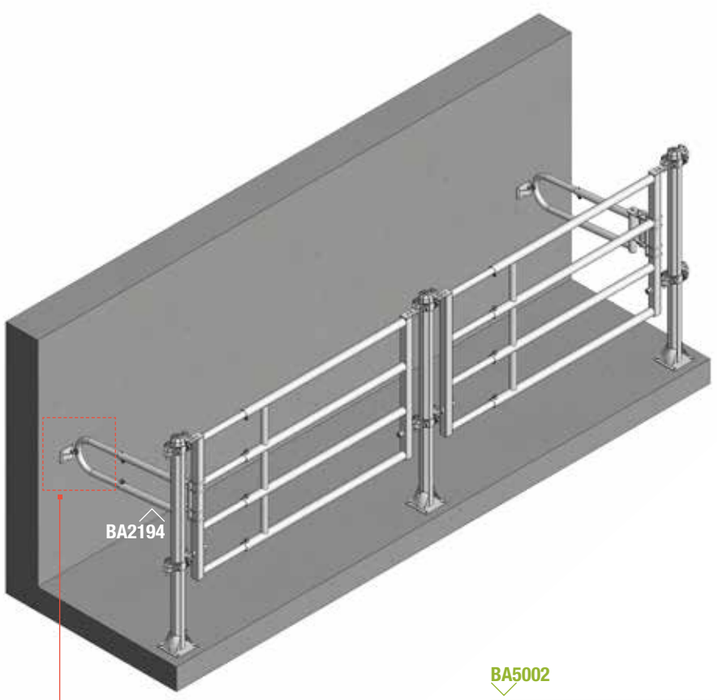

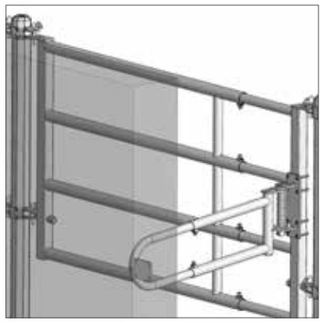

BA5002

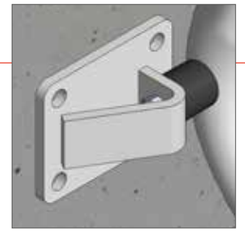

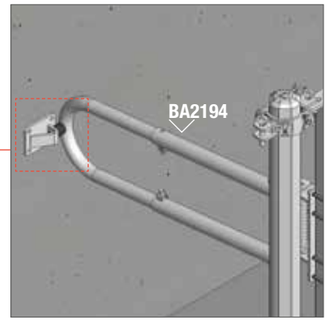

OCTAGONAL POST
Ø 102 MM

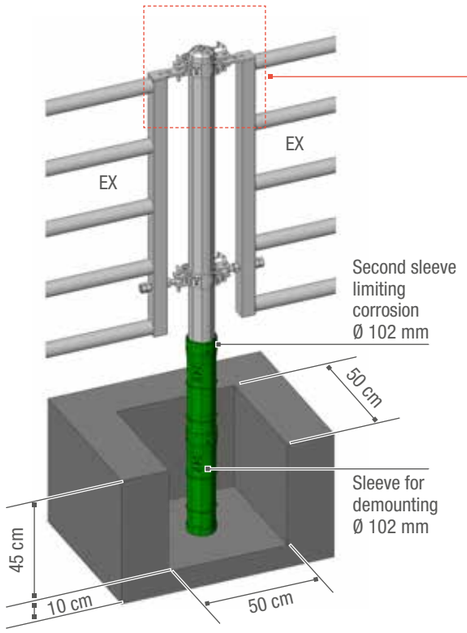

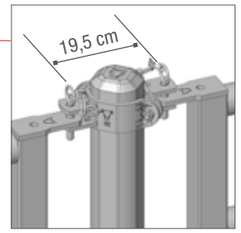

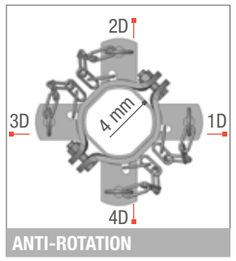

ATTENTION! Pay attention to the direction when setting in the post. The round part shows the direction.

SV9341
Support bracket Ø 102 mm for octagonal sleeve

TR1613
Sleeve lid Ø 102 mm

TR4100
Demounting sleeve Ø 102 mm with collar seal and base

FE2103
Universal bolt support bracket

PATENTED NEW

FE3113
SURLOCK wall bracket

FE3153
Bracket Ø 102 mm single bolt support SURLOCK

FE2154
Bracket Ø 102 mm double bolt support AUTOLOCK

FE2150
Bracket single bolt support STANDARD Ø 102 mm

FE2151
Bracket double bolt support Ø 102 mm

TR4001
Bracket OCTAGONAL 1 way Ø 102 mm

TR4002
Bracket OCTAGONAL 2 way Ø 102 mm

TR4003
Bracket OCTAGONAL 3 way Ø 102 mm

TR4004
Bracket OCTAGONAL 4 way Ø 102 mm

TR4005
Bracket OCTAGONAL 2 way L form Ø 102 mm

INSTALLATION ADVICE: Never set in an OCTAGONAL sleeve on its own. Always set it in with the post fitted, paying attention to the direction of the post and its brackets.The sleeve is marked 1D, 2D, 3D, 4D to show the correct direction for setting in. Fit the corrosion limiting sleeves before putting in the post.

OCTAGONAL POST
Ø 102 MM X 4 MM

TR1850	Post OCTAGONAL bare 1.85 m (for HEADLOCK mounting)	(Pack x 25)	18.3 kg	NEW
TR2130	Post OCTAGONAL bare L. 2.13 m	(Pack x 25)	21 kg	
TR2430	Post OCTAGONAL bare L. 2.43 m	(Pack x 25)	24 kg	
TR2730	Post OCTAGONAL bare L. 2.73 m		27 kg	
TR2131	Post OCTAGONAL 1 way Ø 102 mm (welded)	(Pack x 25)	22 kg	
TR2132	Post OCTAGONAL 2 way Ø 102 mm (welded)	(Pack x 25)	23 kg	
TR2133	Post OCTAGONAL 3 way Ø 102 mm (welded)	(Pack x 25)	24 kg	
TR2134	Post OCTAGONAL 4 way Ø 102 mm (welded)	(Pack x 25)	25 kg	
TR2135	Post OCTAGONAL 2 way L form Ø 102 mm (welded)	(Pack x 25)	23 kg	
TR1680	Post OCTAGONAL bare on base Ø 102 mm L. 1.68m	(Pack x 25)	19 kg	

BRACKET
FOR OCTAGONAL POST Ø 102 MM
With reinforced side 60 x 8 mm

TR4001	Bracket OCTAGONAL 1 way Ø 102 mm	2.2 kg	
TR4002	Bracket OCTAGONAL 2 way Ø 102 mm	2.7 kg	
TR4003	Bracket OCTAGONAL 3 way Ø 102 mm	3.2 kg	
TR4004	Bracket OCTAGONAL 4 way Ø 102 mm	3.6 kg	
TR4005	Bracket OCTAGONAL 2 way L form Ø 102 mm	2.7 kg	
FE2150	Bracket Ø 102 mm single bolt support STANDARD	2.2 kg	
FE2151	Bracket Ø 102 mm double bolt support STANDARD	2.4 kg	
FE3153	Bracket Ø 102 mm single bolt support AUTOLOCK	2.5 kg	NEW
FE2154	Bracket Ø 102 mm double bolt support AUTOLOCK	3.4 kg	

FITTING
BOLT BRACKET

FE2103	For EX 4 - EX 5 - Grassland gates - standard adaptable bolt (1 bracket per bolt) **(pair)**	16 kg	
FE3113	SURLOCK wall bracket **(pair)**	3 kg	NEW

OCTAGONAL SLEEVE
FOR OCTAGONAL POSTØ 102 MM
In order to make a post demountable: order an OCTAGONAL sleeve Ref. TR4100.
To LIMIT corrosion order a second OCTAGONAL sleeve Ref: TR4100.

TR4100	Demounting sleeve Ø 102 mm with collar seal and base (unit)	(Pack x 34)	0.5 kg	
TR1613	Sleeve lid Ø 102 mm		1 kg	
SV9341	Support bracket Ø 102 mm for OCTAGONAL sleeve		0.7 kg	NEW

BITUMINOUS PAINT

TR0005	Bituminous paint pot 5L (0,5 l / m²)	5 kg

IMPORTANT! In order to prevent corrosion steel in zinc due to prolonged contact with silage, slurry or muck, it is recommended that bituminous paint TR0005 should be applied before use, and periodically thereafter, in order to protect the equipment: post feet, barrier and cubicle bottoms, knee bars, brackets.

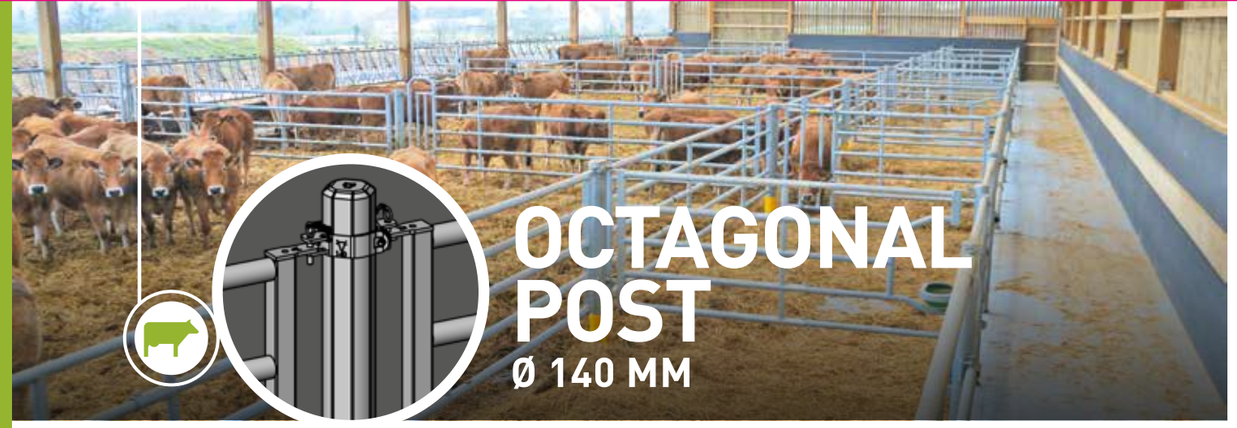

OCTAGONAL POST
Ø 140 MM

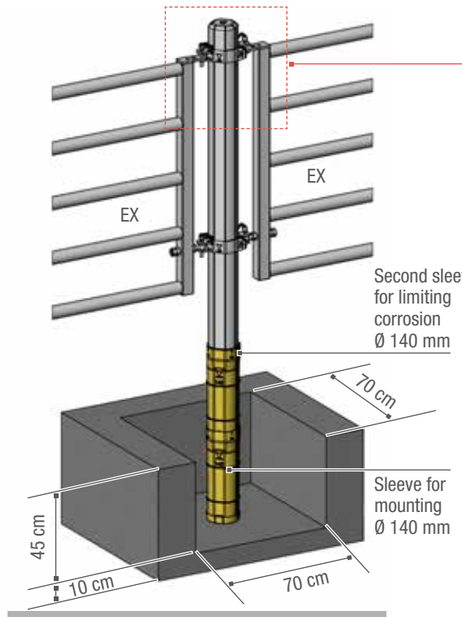

DETAIL FOR SETTING IN AN OCTAGONAL SLEEVE

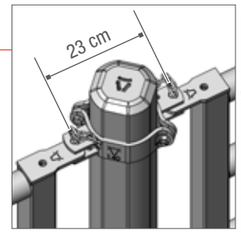

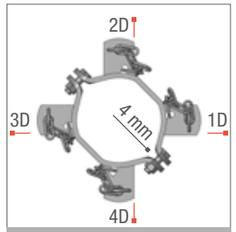

ANTI-ROTATION

! ATTENTION!
Pay attention to the direction when setting in the post. The round part shows the direction.

SV9342
Support bracket Ø 140 mm for OCTAGONAL sleeve

TR1615
Sleeve lid Ø 140 mm

TR4140
Demounting sleeve Ø 140 mm with collar seal and base

FE2103
Universal bolt support bracket

PATENTED NEW

FE3113
SURLOCK wall bracket

FE3196
Bracket Ø 140 mm single bolt support SURLOCK

FE2197
Bracket Ø 140 mm double bolt support AUTOLOCK

FE2190
ROUND bracket Ø 140 mm single bolt support STANDARD

TR2181
Bracket OCTAGONAL 1 way Ø 140 mm

TR2182
Bracket OCTAGONAL 2 way Ø 140 mm

TR2183
Bracket OCTAGONAL 3 way Ø 140 mm

TR2184
Bracket OCTAGONAL 1 way Ø 140 mm

TR2185
Bracket OCTAGONAL 2 way L form Ø 102 mm

INSTALLATION ADVICE: Never set in an OCTAGONAL sleeve on its own. Always set it in with the post fitted, paying attention to the direction of the post and its brackets.The sleeve is marked 1D, 2D, 3D, 4D to show the correct direction for setting in. Fit the corrosion limiting sleeves before putting in the post.

OCTAGONAL POST
Ø 140 MM X 4 MM - ANTI-ROTATION

TR2170	Post OCTAGONAL bare L 2.13 m	(Pack x 16)	28 kg
TR2175	Post OCTAGONAL bare L 2.43 m	(Pack x 16)	33 kg

BRACKET
FOR OCTAGONAL POST Ø 140 MM
With reinforced side 60 x 8 mm

TR2181	Bracket OCTAGONAL 1 way Ø 140 mm	2.5 kg	
TR2182	Bracket OCTAGONAL 2 way Ø 140 mm	3 kg	
TR2183	Bracket OCTAGONAL 3 way Ø 140 mm	3.5 kg	
TR2184	Bracket OCTAGONAL 4 way Ø 140 mm	4 kg	
TR2185	Bracket OCTAGONAL 2 way L form Ø 140 mm	3 kg	
FE2190	Bracket Round Ø 140 mm single bolt support STANDARD	3.5 kg	
FE3196	Bracket Ø 140 mm single bolt support SURLOCK	3 kg	NEW
FE2197	Bracket Ø 140 mm double bolt support AUTOLOCK	4 kg	

FITTING
BOLT BRACKET

FE2103	For EX 4 - EX 5 - Grassland gates - standard adaptable bolt (1 bracket per bolt) **(pair)**	1.6 kg	
FE3113	SURLOCK wall bracket **(pair)**	3 kg	NEW

OCTAGONAL SLEEVE
FOR OCTAGONAL POST Ø 140 MM
In order to make a post demountable: order an OCTAGONAL sleeve Ref. TR4100.
To LIMIT corrosion order a second OCTAGONAL sleeve Ref: TR4100.

TR4140	Demounting sleeve Ø 140 mm with collar seal and base	(Pack x 20)	0.7 kg	
TR1615	Sleeve lid Ø 140 mm		2 kg	
SV9342	Support bracket Ø 140 mm for OCTAGONAL sleeve		0.9 kg	NEW

BITUMINOUS PAINT

TR0005	Bituminous paint pot 5L (0,5 l / m²)	5 kg

! IMPORTANT! In order to prevent corrosion steel in zinc due to prolonged contact with silage, slurry or muck, it is recommended that bituminous paint TR0005 should be applied before use, and periodically thereafter, in order to protect the equipment: post feet, barrier and cubicle bottoms, knee bars, brackets.

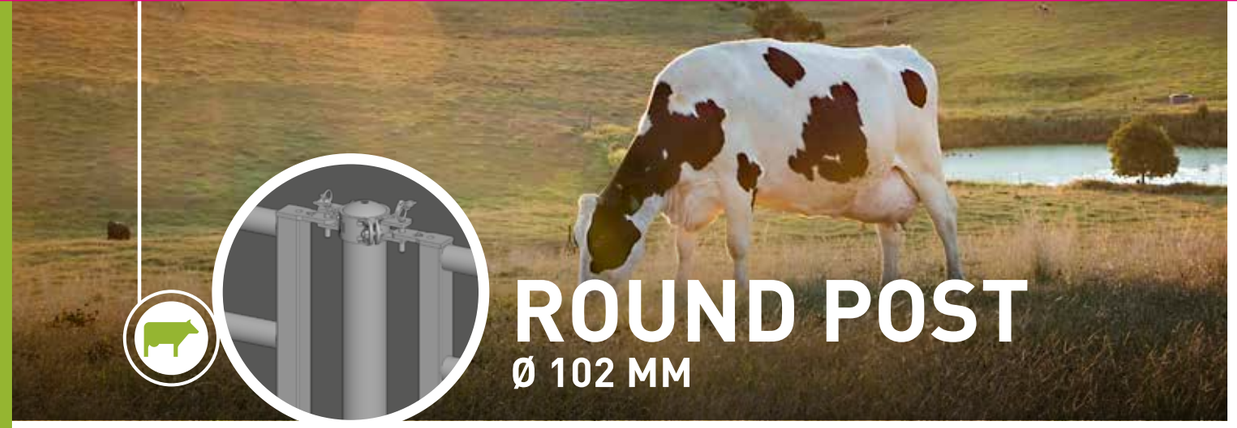

ROUND POST
Ø 102 MM

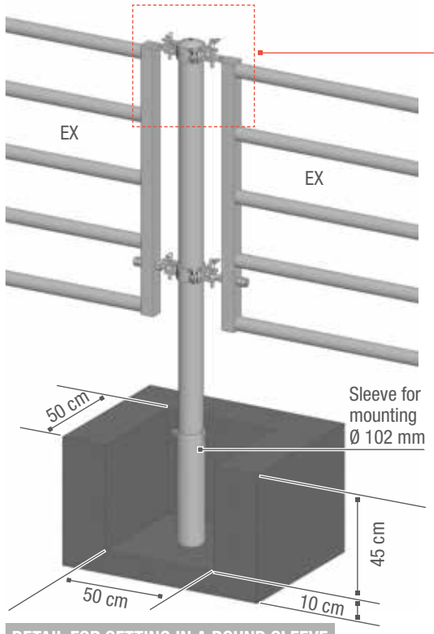

DETAIL FOR SETTING IN A ROUND SLEEVE

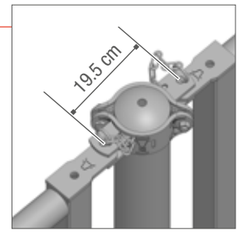

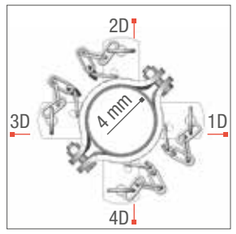

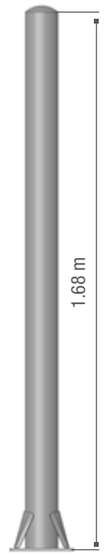

FE2198
Post ROUND bare on plate

TR1613
Sleeve lid Ø 102 mm

FE1603
Sleeve for ROUND post Ø 102 mm

FE2103
Universal bolt support bracket

PATENTED NEW

FE3113
SURLOCK wall bracket

FE3153
Bracket Ø 102 mm single bolt support SURLOCK

FE2154
Bracket Ø 102 mm double bolt support AUTOLOCK

FE2112
Counter Plate

FE2150
Bracket Ø 102 mm single bolt support STANDARD

FE2151
Bracket Ø 102 mm double bolt support STANDARD

FE2155
ROUND bracket 1 way Ø 102 mm

FE2156
ROUND bracket 2 way Ø 102 mm

FE2157
ROUND bracket 3 way Ø 102 mm

FE2158
ROUND bracket 4 way Ø 102 mm

FE2159
ROUND bracket 2 way L form Ø 102 mm

INSTALLATION ADVICE: Never set in an OCTAGONAL sleeve on its own. Always set it in with the post fitted, paying attention to the direction of the post and its brackets.

ROUND POST
Ø 102 MM x 4 MM

FE2120	Post ROUND bare STANDARD L. 2.13 m	21 kg
FE2192	Post ROUND bare extended L. 2.43 m	24 kg
FE2193	Post ROUND bare extended L. 2.73 m	27 kg
FE2198	Post ROUND bare on plate L. 1.68 m	19 kg
FE2180	Post reduced diameter end bare L. 2.13 m	21 kg

BRACKET
FOR ROUND POST Ø 102 MM
With reinforced side 60 x 8 mm

FE2155	ROUND bracket 1 way Ø 102 mm	2.2 kg	
FE2156	ROUND bracket 2 way Ø 102 mm	2.7 kg	
FE2157	ROUND bracket 3 way Ø 102 mm	3.2 kg	
FE2158	ROUND bracket 4 way Ø 102 mm	3.6 kg	
FE2159	ROUND bracket 2 way L form Ø 102 mm	2.7 kg	
FE2150	Bracket Ø 102 mm single bolt support STANDARD	2.2 kg	
FE2151	Bracket Ø 102 mm double bolt support STANDARD	2.4 kg	
FE3153	Bracket Ø 102 mm single bolt support SURLOCK	2.5 kg	NEW
FE2154	Bracket Ø 102 mm double bolt support AUTOLOCK	3.4 kg	

FITTING
BOLT BRACKET

FE2103	For EX 4 - EX 5 - Field gates - standard adaptable bolt (1 bracket per bolt) **(pair)**	1.6 kg	
FE3113	SURLOCK wall bracket **(pair)**	3 kg	NEW

ROUND SLEEVE
FOR ROUND POST Ø 102 MM
Sleeve for demounting with anti-rotation notch

FE1603	Sleeve for ROUND post Ø 102 mm (unit)	5 kg
TR1613	Sleeve lid Ø 102 mm	1 kg

BITUMINOUS PAINT

TR0005	Bituminous paint pot 5L (0,5 l / m²)	5 kg

COUNTER PLATE ONLY

FE2112	Counter Plate only (200 x 200 x 8 mm)	2.3 kg

IMPORTANT! In order to prevent corrosion steel in zinc due to prolonged contact with silage, slurry or muck, it is recommended that bituminous paintTR0005 should be applied before use, and periodically thereafter, in order to protect the equipment: post feet, barrier and cubicle bottoms, knee bars, brackets…

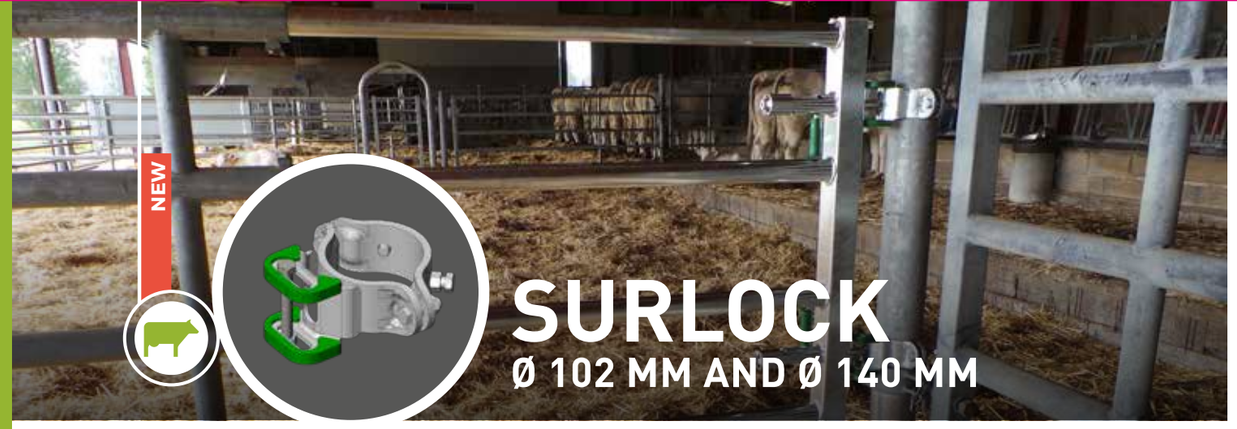

YouTube ENTER JOURDAIN

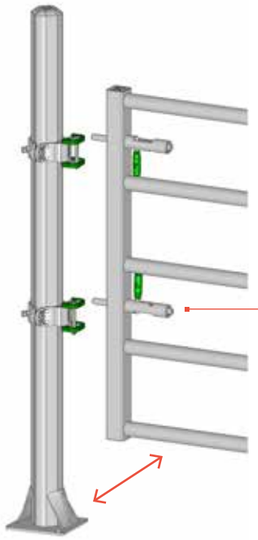

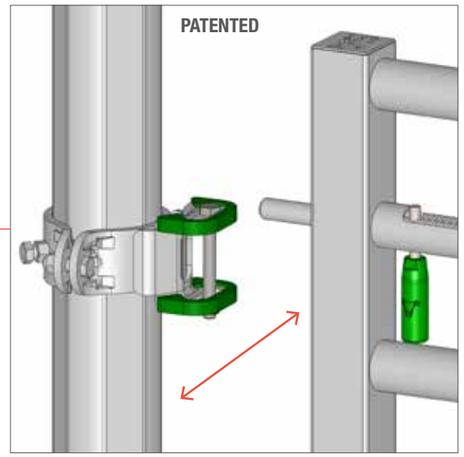

PATENTED

FE3113
SURLOCK wall bracket

SURLOCK

THE SURLOCK BRACKET COMBINED WITH AN AUTOLOCK GATE FRONT ENSURES THAT THE GATE WILL BE BOLTED WHEN IT IS SLAMMED SHUT. The SURLOCK works for both left and right-hand opening thanks to the movable SURLOCK catch. Our clients now find the SURLOCK indispensable as a safety device. SURLOCK is patented.

FE3153	Bracket Ø 102 mm single bolt support SURLOCK	2.5 kg
FE3196	Bracket Ø 140 mm single bolt support SURLOCK	3 kg
FE3113	SURLOCK wall bracket **(pair)**	3 kg

PATENTED

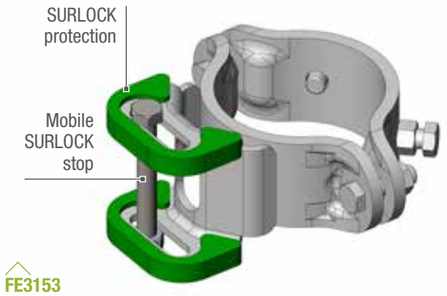

FE3153
Bracket Ø 102 mm
single bolt support
SURLOCK

PATENTED

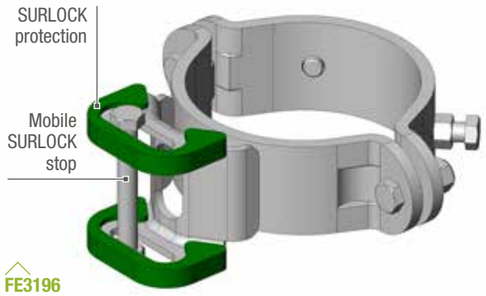

FE3196
Bracket Ø 140 mm
single bolt support
SURLOCK

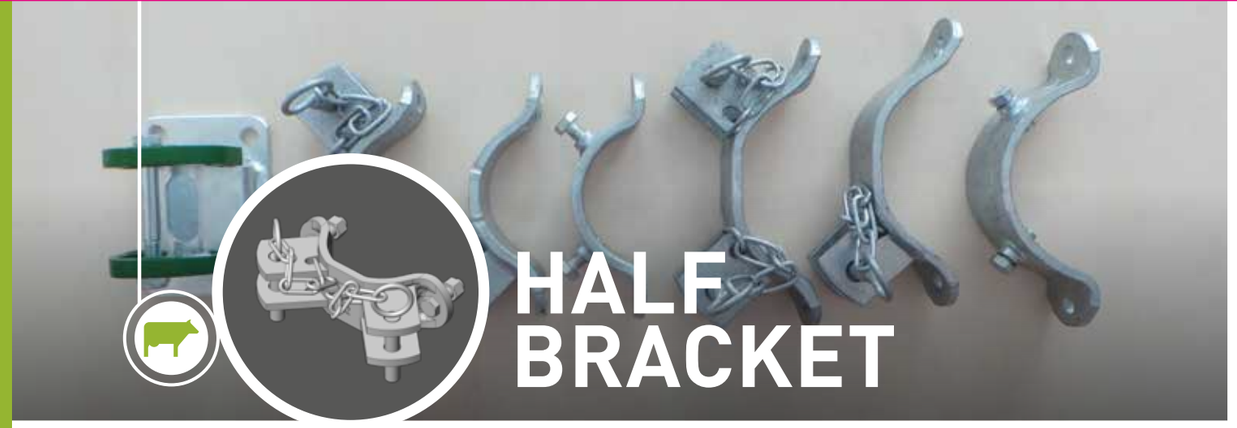

HALF BRACKET

HALF BRACKET
OCTAGONAL Ø 102 MM

TR4060

TR4061

TR4062

NEW
TR4065

NEW
TR4055

NEW
TR4068

NEW
TR4059

HALF BRACKET
OCTAGONAL Ø 140 MM

TR4070

TR4071

TR4072

HALF BRACKET
ROUND Ø 102 MM

FE2160

FE2161

FE2162

FE2174

NEW
FE3053

FE2179

FE2168

FE2169

NEW
FE2175

HALF BRACKET
ROUND Ø 140 MM

FE2204

NEW
FE3096

FE2219

FE2208

INDIVIDUAL FITTING

NEW
FE3013

FE2003

HALF BRACKET

THE BRACKETS ARE MADE FROM 60 X 8 MM FLAT STEEL WITH A REINFORCING BUMP. Delivered with SAC122.

HALF BRACKET
OCTAGONAL Ø 102 MM

TR4060	Half bracket OCTAGONAL bare Ø 102 mm	(Pack x 40)	0.85 kg	
TR4061	Half bracket OCTAGONAL 1 way Ø 102 mm	(Pack x 20)	1.35 kg	
TR4062	Half bracket OCTAGONAL 2 way Ø 102 mm	(Pack x 20)	1.8 kg	
TR4065	Half bracket OCTAGONAL 1 way centered Ø 102 mm		1.35 kg	NEW
TR4055	Half octobracket Ø 102 mm for headlock top fixing (for headlocks of up to 4 m)		1.4 kg	NEW
TR4068	Half bracket OCTAGONAL Ø 102 mm (strap tightening)		2.7 kg	NEW
TR4059	Headlock end part with half bracket welded Ø 102 mm (for headlocks of up to 4 m)		1.8 kg	NEW

HALF BRACKET
OCTAGONAL Ø 140 MM

TR4070	Half bracket OCTAGONAL bare Ø 140 mm	(Pack x 20)	1 kg
TR4071	Half bracket OCTAGONAL1 way Ø 140 mm	(Pack x 20)	1.5 kg
TR4072	Half bracket OCTAGONAL 2 way Ø 140 mm	(Pack x 16)	2 kg

HALF BRACKET
ROUND Ø 102 MM

FE2160	Half ROUND bracket bare Ø 102 mm	(Pack x 40)	0.85 kg	
FE2161	Half ROUND bracket 1 way Ø 102 mm	(Pack x 20)	1.4 kg	
FE2162	Half ROUND bracket 2 way Ø 102 mm	(Pack x 20)	1.8 kg	
FE2174	Half ROUND bracket plain Ø 102 mm anti-rotation (2 fixing screws)	(Pack x 20)	1.2 kg	
FE3053	Half ROUND bracket single bolt support SURLOCK Ø 102 mm	(Pack x 20)	1.6 kg	NEW
FE2179	Half ROUND bracket double bolt support AUTOLOCK Ø 102 mm		2.55 kg	
FE2168	Half ROUND bracket single bolt support STANDARD Ø 102 mm	(Pack x 28)	1.35 kg	
FE2169	Half ROUND bracket double bolt support STANDARD Ø 102 mm	(Pack x 14)	1.55 kg	
FE2175	Half ROUND bracket 1D centered Ø 102 mm		1.35 kg	NEW

HALF BRACKET
ROUND Ø 140 MM

FE2204	Half ROUND bracket plain Ø 140 mm anti-rotation (2 fixing screws)	(Pack x 20)	1.35 kg	
FE3096	Half ROUND bracket single bolt support SURLOCK Ø 140 mm		1.8 kg	NEW
FE2219	Half ROUND bracket double bolt support AUTOLOCK Ø 140 mm		3 kg	
FE2208	Half ROUND bracket single bolt support STANDARD Ø 140 mm		2.5 kg	

FITTING
BOLT BRACKET

FE3013	SURLOCK wall bracket (unit)	(Pack x 20)	1.5 kg	NEW
FE2003	Bolt support universal (unit)	(Pack x 40)	0.8 kg	

BRACKET
(IN PAIR)

MULTIFIX
BRACKET

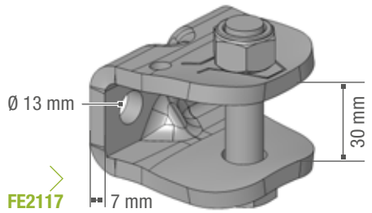

FE2117

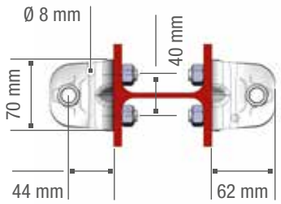

BRACKET
"I" FORM

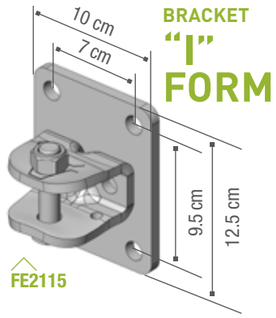

FE2115

EXTENDED MULTIFIX
BRACKET

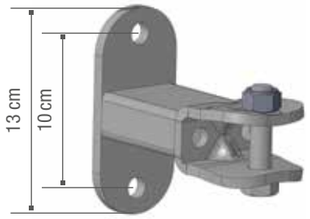

FE2114

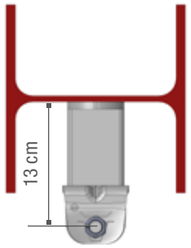

TRIO
FITTING

FE2010

SINGLE
BRACKET

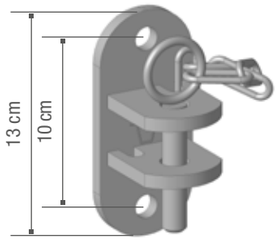

FE2102

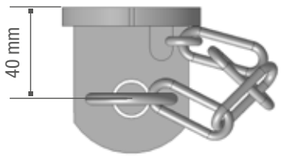

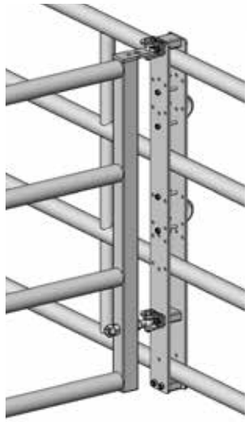

WALL END
BRACKET

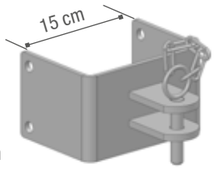

FE2107
For wall
150 mm

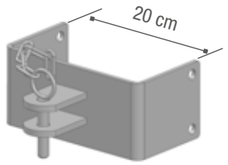

FE2108
For wall
200 mm

BRACKET (IN PAIR)

MULTIFIX BRACKET			
FE2117	MULTIFIX bracket with bolt Delivered with 1 bolt Ø 14 mm + nylon nut	(pair)	1.2 kg
FE2099	Short chain with carabiner	(pair)	0.32 kg
MULTIFIX EXTENDED BRACKET			
FE2114	Multifix extended H bracket	(pair)	2.8 kg
SINGLE BRACKET			
FE2102	Single bracket (for partition)	(pair)	2 kg
FE2115	Reinforced bracket "I" form	(pair)	2.7 kg
WALL END BRACKET			
FE2107	For wall of 15 cm	(pair)	8 kg
FE2108	For wall of 20 cm	(pair)	9 kg
DOUBLE BRACKET			
FE2101	Double bracket (for facades)	(pair)	4.4 kg
TRIPLE BRACKET			
FE2109	Triple bracket	(pair)	6 kg
TRIO FITTING			
FE2010	Trio fitting		18.5 kg
OV9935	ROUND bracket Ø 76 mm (for locking 2 gates AUTOLOCK)		1.1 kg

DOUBLE
BRACKET

FE2101

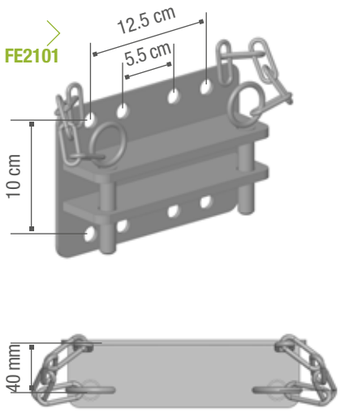

TRIPLE
BRACKET

FE2109

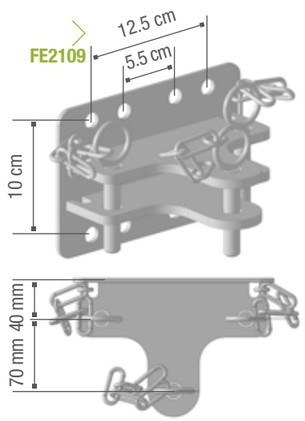

FE2099
Short chain
with carabiner

BRACKET
(UNIT)

BRACKET
(UNIT)

FE2017	MULTIFIX bracket with bolt	(Pack x 60)	0.6 kg
FE2014	Bracket extended MULTIFIX		1.4 kg
FE2002	Single bracket	(Pack x 40)	1 kg
FE2007	Bracket wall end 15 cm		4 kg
FE2008	Bracket wall end 20 cm		4.5 kg
FE2015	Reinforced bracket “I” form		1.35 kg
FE2001	Double bracket	(Pack x 16)	2.2 kg
FE2009	Triple bracket		3 kg

FE2017

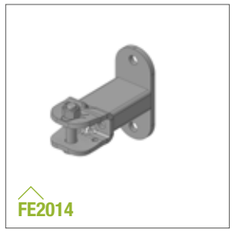
FE2014

FE2002

FE2015

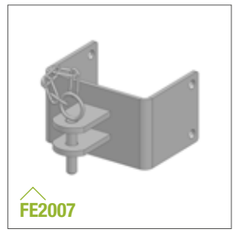
FE2007

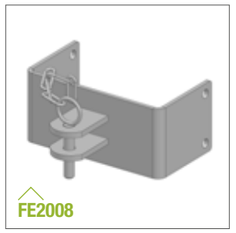
FE2008

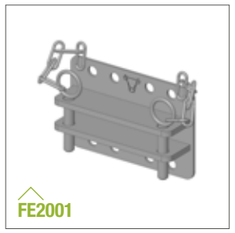
FE2001

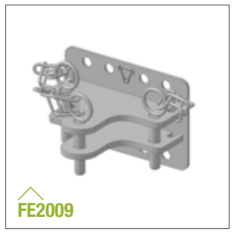
FE2009

DRINKER ASSEMBLY
BALL DRINKER OR PIPE MOUNTED DRINKER

THE GAP IS MADE UP OF TWO Ø 102 MM POSTS TO BE SET IN WITH A UNIVERSAL SLEEVE BAR BETWEEN THE POST TOPS, made using 2 tubes Ø 60 mm with a standard end at either end.

Example for mounting with Ø 102 mm:
- 2 universal blocking bars,
- 2 OCTAGONAL posts Ø 102 mm to be set in,
- 4 OCTAGONAL brackets Ø 102 mm 1 way,
- 2 OCTAGONAL brackets Ø 102 mm 2 way,
- 4 standard supports.

FE2149	Universal blocking bars (remember to order 2 struts per bar)	2.3 kg

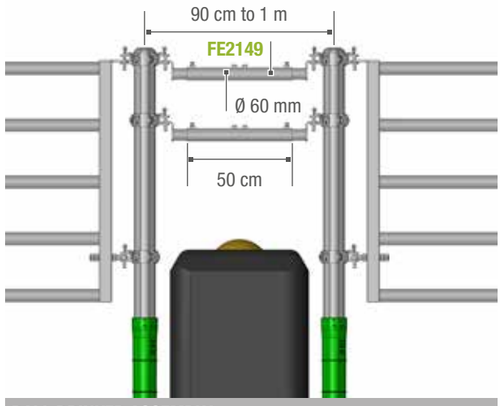

BALL DRINKER ASSEMBLY

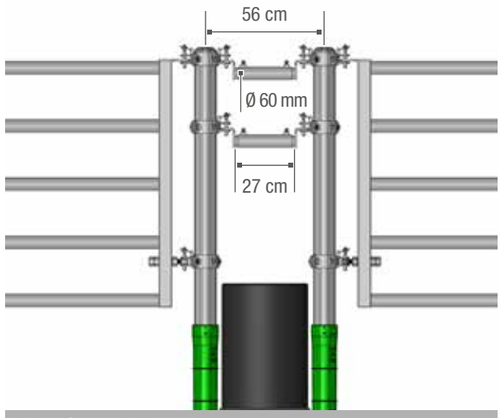

PIPE MOUNTED DRINKER

The universal blocking bar has been made to suit a ball drinker. It needs to be shortened in order to fit a pipe mounted drinker.

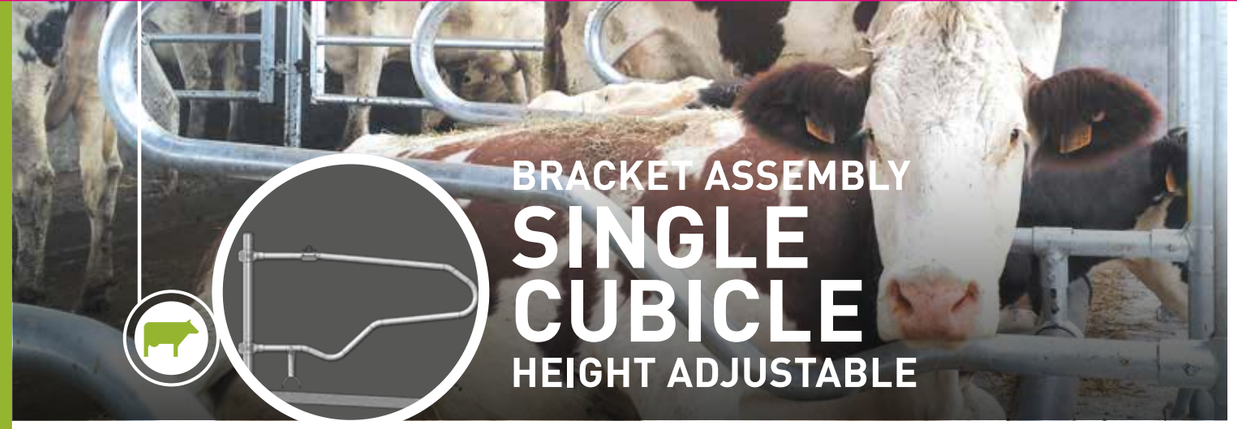

CUBICLE

EURO 1.95 M BLS

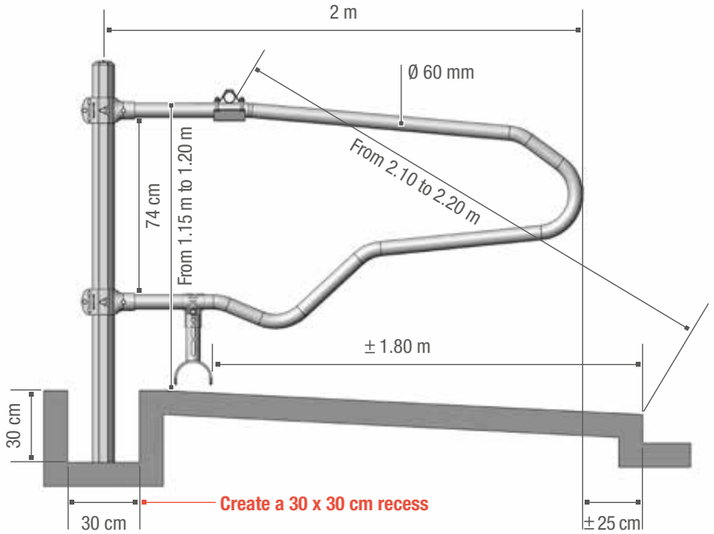

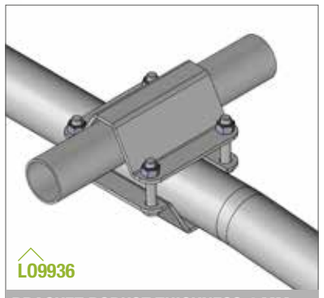

BRACKET ROBUST THICKNESS 4 MM

For cubicles of 1.15 m and 1.20 m from centre to centre.The dimensions are given as an indication.Please adapt them to suit your stock and the lying area.

CUBICLE

TEXANE 2.08 M BLS

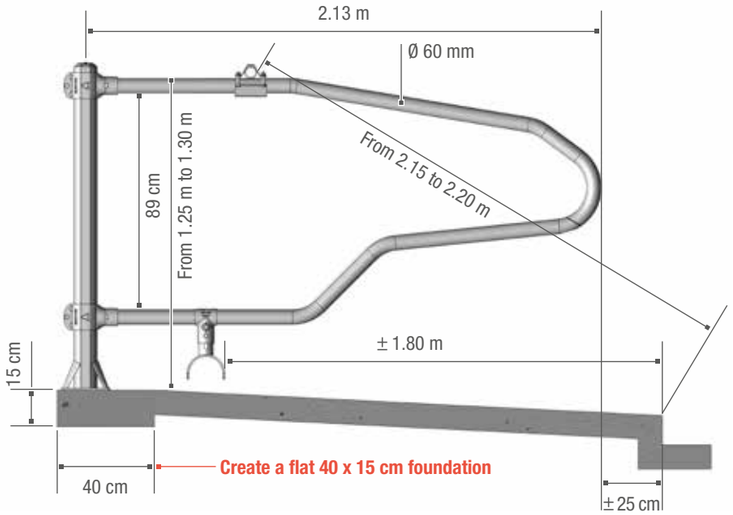

SINGLE CUBICLE BRACKET OCTAGONAL BLS (PAIR)

BLS CUBICLE ASSEMBLY

(SINGLE CUBICLE BRACKET)

1 CUBICLE - 2 BLS BRACKETS THICKNESS 6 MM - 1 OCTAGONAL POST 102 MM

Economic version that only provides height adjustment of the partition. Available in three versions: EURO, TEXANE, US.

! ATTENTION!
The flat section indicates the direction for setting in the post.

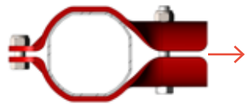

CUBICLE LOOP

CUBICLE LOOP EURO			
LO3100	Cubicle loop EURO Milking bare L. 1.95 m	19 kg	
LO3108	Cubicle loop EURO Milking bare L. 2.08 m	20 kg	
LO3115	Cubicle loop EURO Milking bare L. 2.15 m	21 kg	
LO3125	Cubicle loop EURO Milking bare L. 2.25 m	22 kg	NEW
CUBICLE LOOP TEXANE			
LO3103	Cubicle loop TEXANE bare L. 2.08 m	20 kg	
LO3117	Cubicle loop TEXANE bare L. 2.15 m	21 kg	
CUBICLE LOOP US			
LO3170	Cubicle loop US cow bare L. 1.95 m	19 kg	

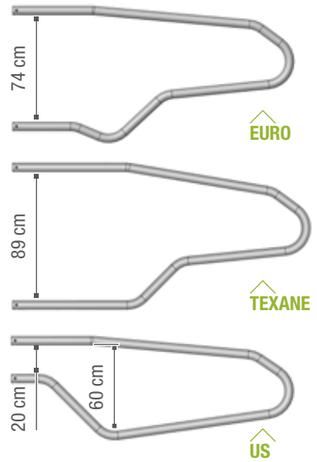

BLS BRACKET

Allow one post and a pair of BLS brackets per loop.

LO3156	Single cubicle brackets OCTAGONAL BLS **(pair)**	5.2 kg

CUBICLE

POST

TR3189	Cubicle post OCTAGONAL to be set in L. 1.66 m	14 kg
TR3190	Cubicle post OCTAGONAL on base L. 1.32 m	15 kg
TR3180	Cubicle post OCTAGONAL on base L. 1.66 m	16 kg

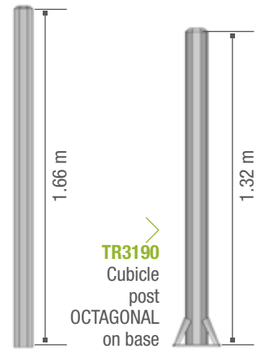

TR3189 Cubicle post OCTAGONAL to be set in

TR3190 Cubicle post OCTAGONAL on base

NECK BAR

LO9936	Bracket robust 60/49 mm thickness 4 mm	1.7 kg
TU9756	Tube Ø 49 mm GALVA L.6 m	20 kg
ST9943	Sleeve connector for tube Ø 49 mm	0.5 kg
LO9941	Bracket neck bar support Ø 49 mm (unit)	0.6 kg

BRACKET FOR

PVC TUBE Ø 125 MM

Bracket for high pressure PVC tube Ø 125 mm (not supplied). It is adaptable for all models except US and Kondor. It can be adjusted to suit the length and the height of the lying area. Allow one bracket for 2 cubicles.

LO3169	Bracket for PVC tube Ø 125 mm	3 kg

ST9943 Sleeve connector for tube Ø 49 mm

! ATTENTION!
It is recommended that a coat of bituminous paint TR0005 is applied before use, and then periodically thereafter in order to protect the bases of the posts and the cubicles.

BRACKET FOR PVC TUBE Ø 125 MM

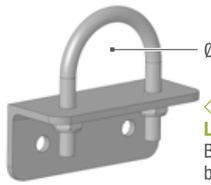

Ø 49 mm

LO9941 Bracket neck bar support

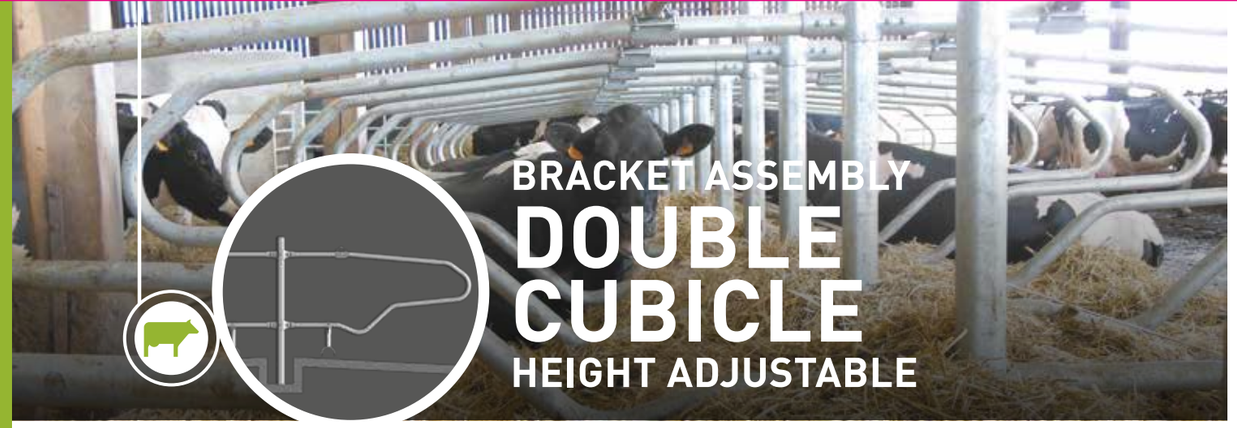

CUBICLE
EURO 1.95 M BLD

A =	1.95 m	2.08 m	2.15 m	2.25 m
B =	4.60 m	4.86 m	5 m	5.18 m

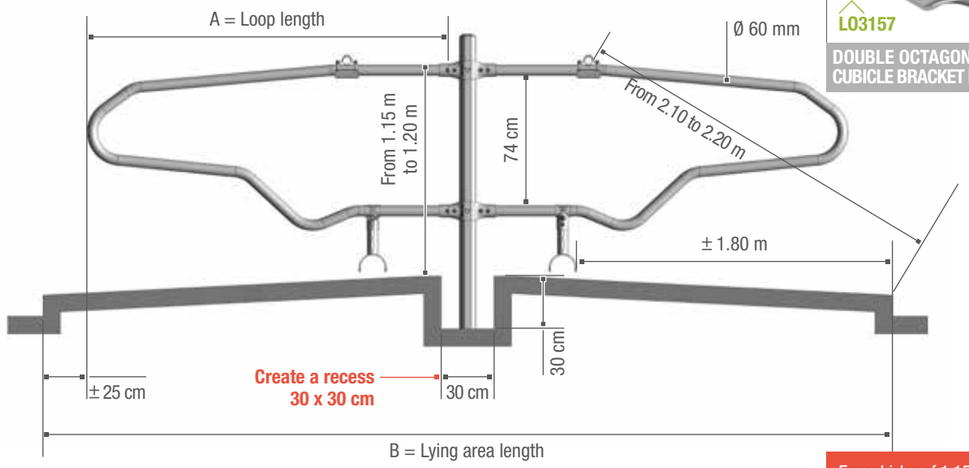

For cubicles of 1.15 m and 1.20 m from centre to centre. The dimensions are given as an indication. Please adapt them to suit your stock and the lying area.

CUBICLE
TEXANE 2.08 M BLD

A =	2.08 m	2.15 m
B =	4.86 m	5 m

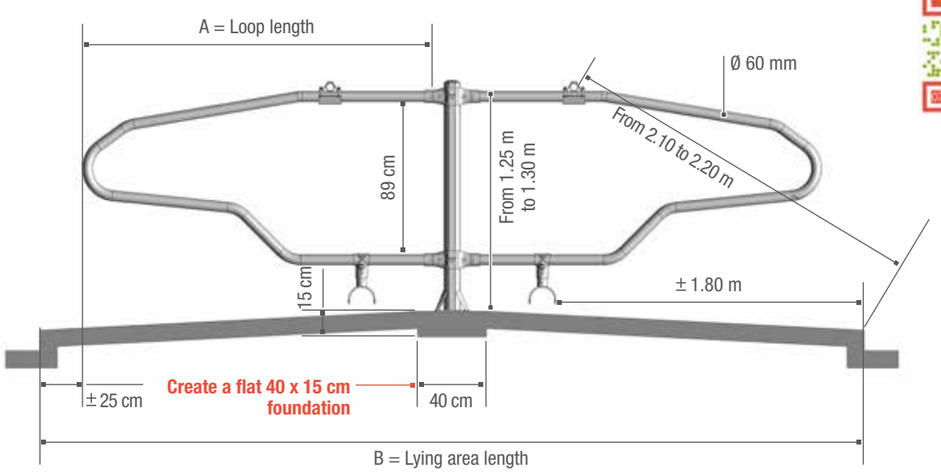

BLD CUBICLE ASSEMBLY
(DOUBLE CUBICLE BRACKET)

2 CUBICLES OPPOSITE EACH OTHER - 2 BLD BRACKETS THICKNESS 6 MM - 1 OCTAGONAL POST Ø 102 MM. Economic version that only provides height adjustment of the partition. Available in three versions: EURO, TEXANE, US.

ATTENTION!
The flat section indicates the direction for setting in the post.

CUBICLE LOOP

CUBICLE LOOP EURO			
LO3100	Cubicle loop EURO Milking bare L. 1.95 m	19 kg	
LO3108	Cubicle loop EURO Milking bare L. 2.08 m	20 kg	
LO3115	Cubicle loop EURO Milking bare L. 2.15 m	21 kg	
LO3125	Cubicle loop EURO Milking bare L. 2.25 m	22 kg	NEW
CUBICLE LOOP TEXANE			
LO3103	Cubicle loop TEXANE bare L. 2.08 m	20 kg	
LO3117	Cubicle loop TEXANE bare L. 2.15 m	21 kg	
CUBICLE LOOP US			
LO3170	Cubicle loop US cow bare L. 1.95 m	19 kg	

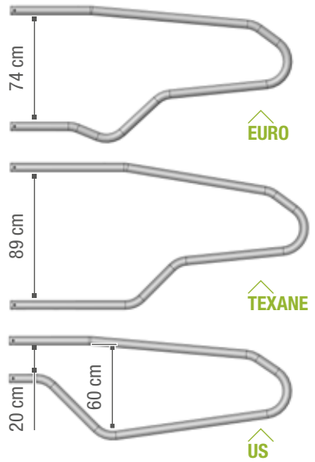

BLD BRACKET
Allow one post and a pair of BLD brackets for 2 loops.

LO3157	Double cubicle bracket octagonal BLD for fixing on OCTAGONAL post Ø 102 mm **(pair)**	7.2 kg

CUBICLE
POST

TR3189	Cubicle post OCTAGONAL to be set in L. 1.66 m	14 kg
TR3190	Cubicle post OCTAGONAL on base L. 1.32 m	15 kg
TR3180	Cubicle post OCTAGONAL on base L. 1.66 m	16 kg

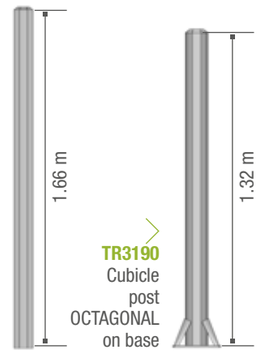

TR3189
Cubicle post OCTAGONAL to be set in

TR3190
Cubicle post OCTAGONAL on base

NECK BAR

LO9936	Bracket robust 60/49 mm thickness 4 mm	1.7 kg
TU9756	Tube Ø 49 mm GALVA L.6 m	20 kg
ST9943	Sleeve connector for tube Ø 49 mm	0.5 kg
LO9941	Bracket neck bar support Ø 49 mm (unit)	0.6 kg

BRACKET FOR
PVC TUBE Ø 125 MM

Bracket for high pressure PVC tube Ø 125 mm (not supplied). it is adaptable for all models except US and Kondor. It can be adjusted to suit the length and the height of the lying area. Allow one bracket for 2 cubicles.

LO3169	Bracket for PVC tube Ø 125 mm	3 kg

ST9943
Sleeve connector for tube Ø 49 mm

ATTENTION!
It is recommended that a coat of bituminous paint TR0005 is applied before use,and then periodically thereafter in order to protect the bases of the posts and the cubicles.

LO3169
BRACKET FOR PVC TUBE Ø 125 MM

LO9936
BRACKET ROBUST THICKNESS 4 MM

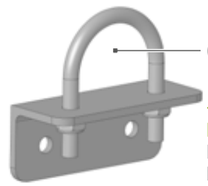

LO9941
Bracket neck bar support

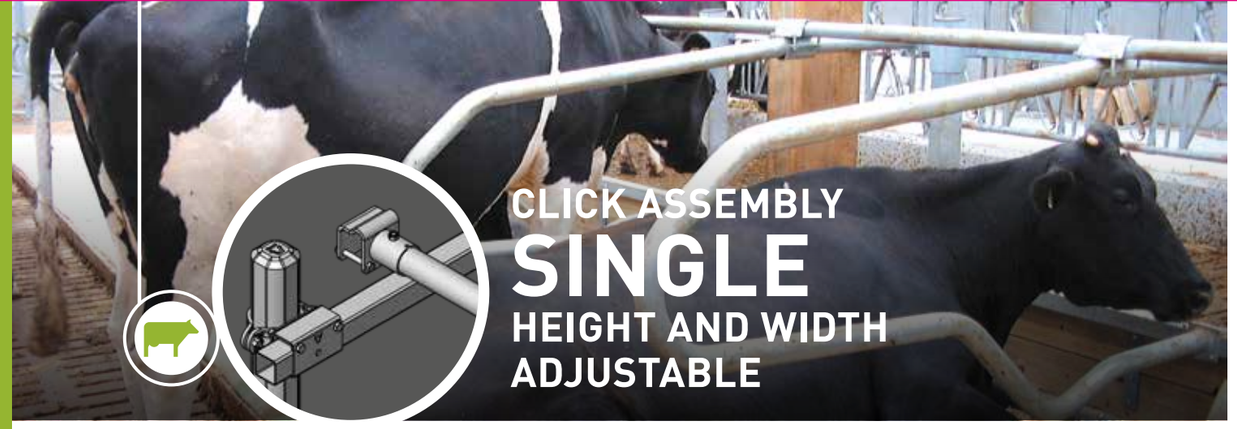

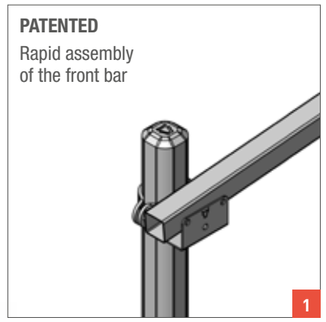

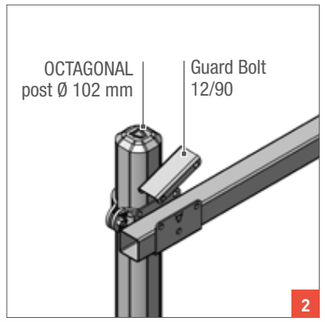

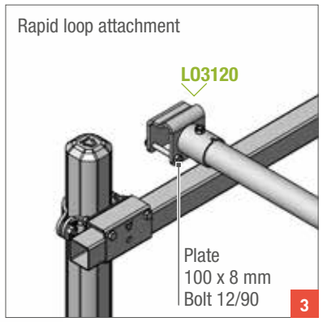

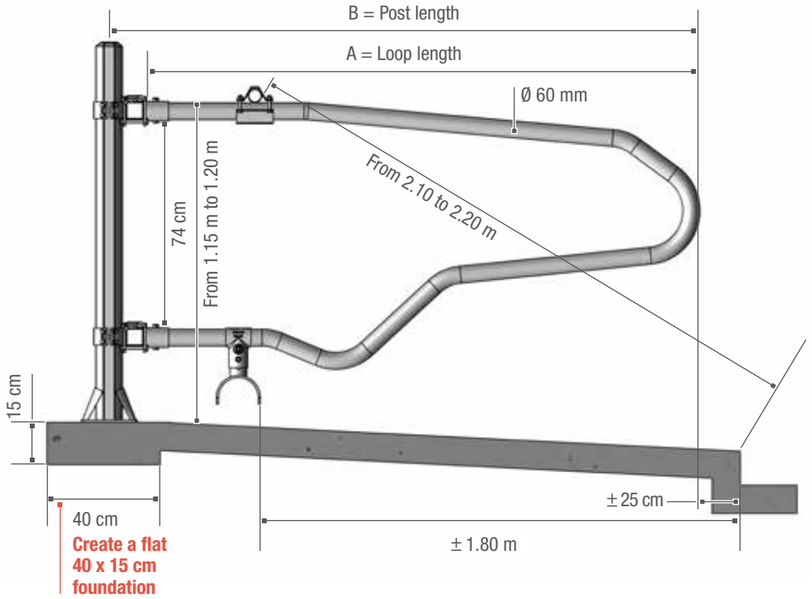

For cubicles of 1.15 m and 1.20 m from centre to centre. The dimensions are given as an indication. Please adapt them to suit your stock and the lying area.

A =	1.95 m	2.08 m	2.15 m	2.25 m
B =	2.08 m	2.21 m	2.28 m	2.31 m

OCTAGONAL CLICK ASSEMBLY CUBICLE

Cubicle Ø 60 mm height and width adjustable.

CUBICLE LOOP

CUBICLE LOOP EURO			
L03100	Cubicle loop EURO Milking bare L. 1.95 m	19 kg	
L03108	Cubicle loop EURO Milking bare L. 2.08 m	20 kg	
L03115	Cubicle loop EURO Milking bare L. 2.15 m	21 kg	
L03125	Cubicle loop EURO Milking bare L. 2.25 m	22 kg	NEW
CUBICLE LOOP TEXANE			
L03103	Cubicle loop TEXANE bare L. 2.08 m	20 kg	
L03117	Cubicle loop TEXANE bare L. 2.15 m	21 kg	
CUBICLE LOOP US			
L03170	Cubicle loop US cow bare L. 1.95 m	19 kg	

CLICK END

Allow one pair of CLICK ends per loop.

L03120	Pair of CLICK type ends Ø 70 mm	4.8 kg

CUBICLE

POST

TR3189	Cubicle post OCTAGONAL to be set in L.1.66 m	14 kg
TR3190	Cubicle post OCTAGONAL on base L.1.32 m	15 kg
TR3180	Cubicle post OCTAGONAL on base L.1.66 m	16 kg

BRACKET

SINGLE OCTAGONAL CLICK CUBICLE

(2 brackets for 1 post) thickness 8 mm

TR3151	Cubicle bracket OCTAGONAL click single (unit)	3.2 kg

NECK BAR

L09936	Bracket robust 60/49 mm thickness 4 mm	1.7 kg
TU9756	Tube Ø 49 mm GALVA L.6 m	20 kg
ST9943	Sleeve connector for tube Ø 49 mm	0.5 kg
L09941	Bracket neck bar support Ø 49 mm (unit)	0.6 kg

FRONT BAR

TU9665	Square tube 60 x 60 mm, L 6 m	30 kg
L03155	Sleeve square frontal bar 60 x 60 mm	1.6 kg
L09940	Bracket square frontal bar 60 x 60 mm **(pair)**	1.2 kg

BRACKET FOR

PVC TUBE Ø 125 MM

Bracket for high pressure PVC tube Ø 125 mm (not supplied). It is adaptable for all models except US and Kondor. It can be adjusted to suit the length and the height of the lying area. Allow one bracket for 2 cubicles.

L03169	Bracket for PVC tube Ø 125 mm	3 kg

ATTENTION!
The flat section indicates the direction for setting in the post.

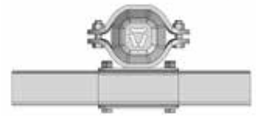

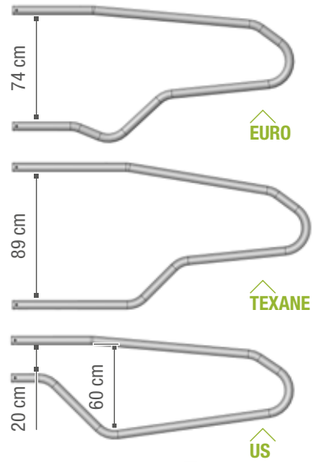

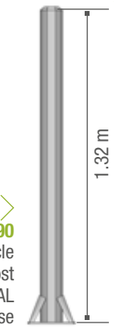

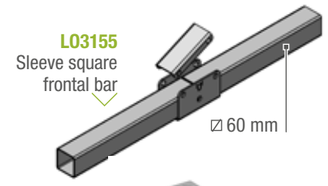

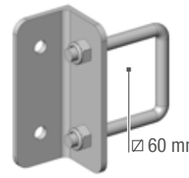

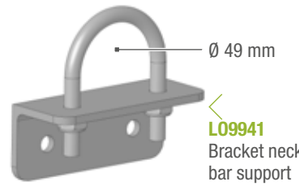

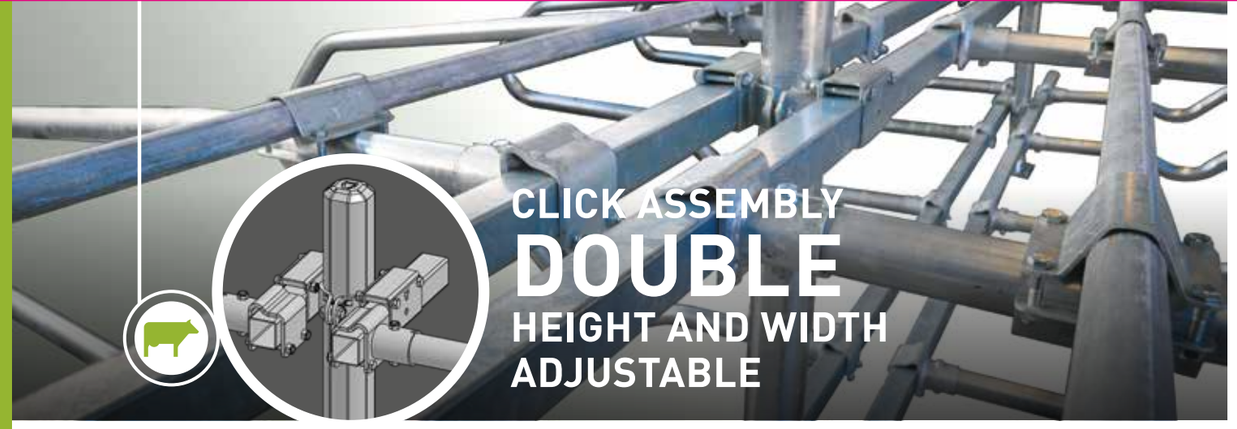

ASSEMBLY

DOUBLE ROW

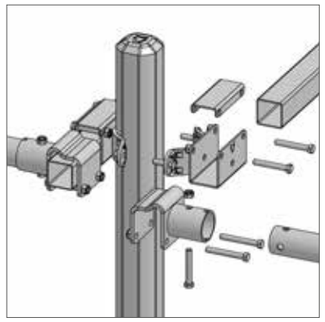

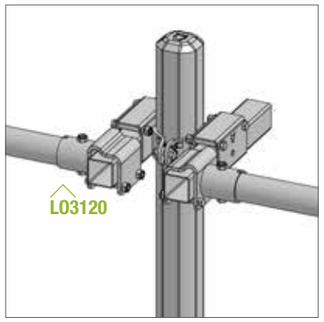

A =	1.95 m	2.08 m	2.15 m	2.25 m
B =	4.66 m	4.92 m	5.06 m	5.26 m

For cubicles of 1.15 m and 1.20 m from centre to centre. The dimensions are given as an indication. Please adapt them to suit your stock and the lying area.

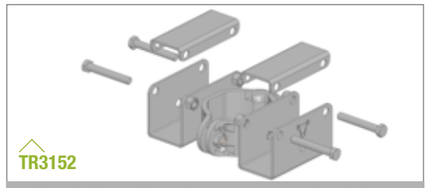

CUBICLE BRACKET OCTOGONAL CLICK DOUBLE

BRACKET ROBUST THICKNESS 4 MM

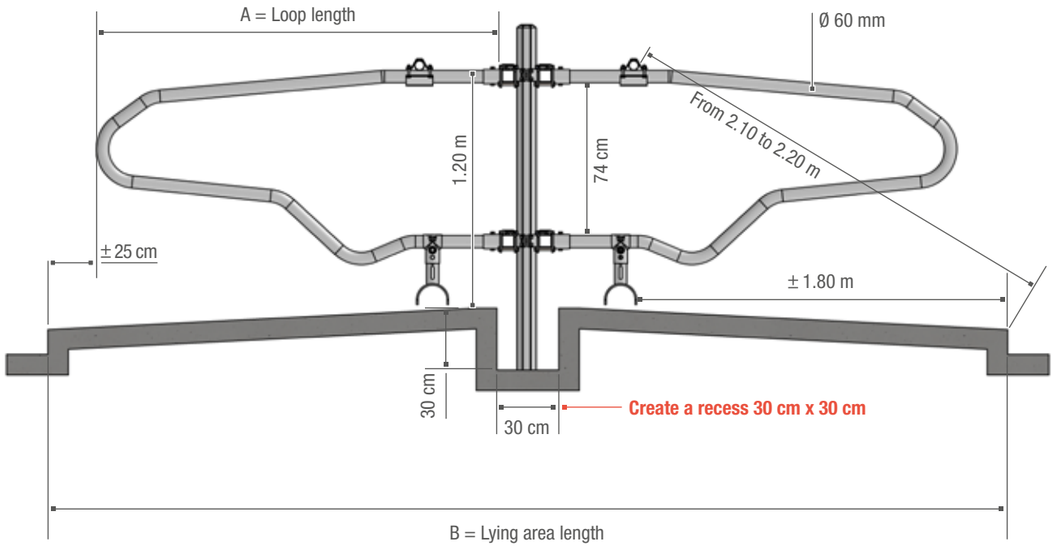

OCTAGONAL CLICK ASSEMBLY CUBICLE

Cubicle Ø 60 mm height and width adjustable.

CUBICLE LOOP

CUBICLE LOOP EURO			
LO3100	Cubicle loop EURO Milking bare L. 1.95 m	19 kg	
LO3108	Cubicle loop EURO Milking bare L. 2.08 m	20 kg	
LO3115	Cubicle loop EURO Milking bare L. 2.15 m	21 kg	
LO3125	Cubicle loop EURO Milking bare L. 2.25 m	22 kg	NEW
CUBICLE LOOP TEXANE			
LO3103	Cubicle loop TEXANE bare L. 2.08 m	20 kg	
LO3117	Cubicle loop TEXANE bare L. 2.15 m	21 kg	
CUBICLE LOOP US			
LO3170	Cubicle loop US cow bare L. 1.95 m	19 kg	

CLICK END

Allow one pair of CLICK ends per loop.

LO3120	Pair of CLICK type ends Ø 70 mm	4.8 kg

CUBICLE

POST

TR3189	Cubicle post OCTAGONAL to be set in L.1.66 m	14 kg
TR3190	Cubicle post OCTAGONAL on base L.1.32 m	15 kg
TR3180	Cubicle post OCTAGONAL on base L.1.66 m	16 kg

BRACKET

DOUBLE OCTOGONAL CLICK CUBICLE

(2 brackets for 1 post) thickness 8 mm

TR3152	Cubicle bracket OCTOGONAL CLICK double (unit)	4.7 kg

NECK BAR

LO9936	Bracket robust 60/49 mm thickness 4 mm	1.7 kg
TU9756	Tube Ø 49 mm GALVA L.6 m	20 kg
ST9943	Sleeve connector for tube Ø 49 mm	0.5 kg
LO9941	Bracket neck bar support Ø 49 mm (unit)	0.6 kg

FRONT BAR

TU9665	Square tube 60 x 60 mm, L 6 m	30 kg
LO3155	Sleeve square frontal bar 60 x 60 mm	1.6 kg
LO9940	Bracket square frontal bar 60 x 60 mm **(pair)**	1.2 kg

BRACKET FOR

PVC TUBE Ø 125 MM

Bracket for high pressure PVC tube Ø 125 mm (not supplied). It is adaptable for all models except US and Kondor. It can be adjusted to suit the length and the height of the lying area. Allow one bracket for 2 cubicles.

LO3169	Bracket for PVC tube Ø 125 mm	3 kg

ATTENTION!
The flat section indicates the direction for setting in the post.

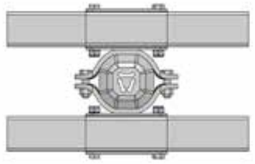

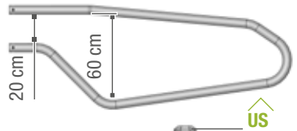

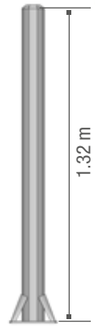

TR3190
Cubicle post OCTAGONAL on base

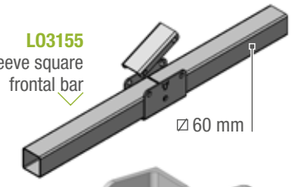

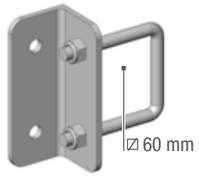

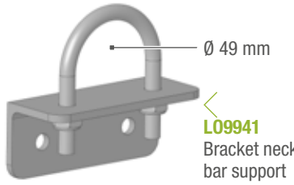

CUBICLE

RELAX SINGLE

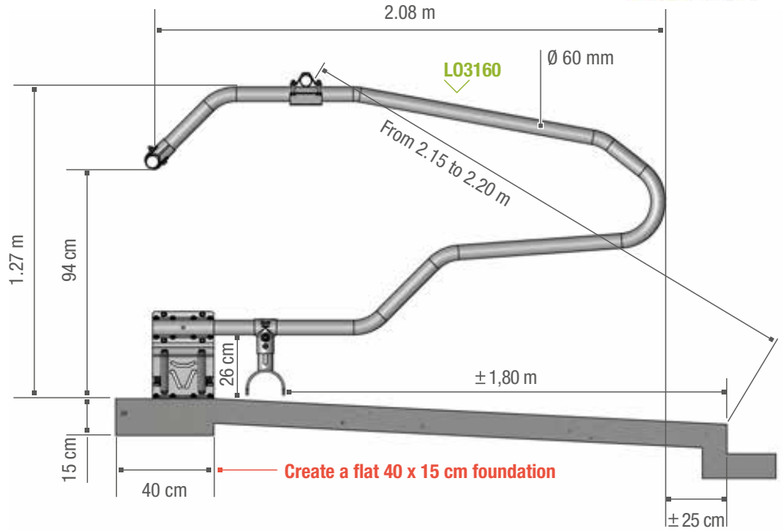

BRACKET ROBUST THICKNESS 4 MM

TRIPLE SLEEVE CONNECTOR RELAX 60/49 MM

For cubicles of 1.15 m and 1.20 m from centre to centre. The dimensions are given as an indication. Please adapt them to suit your stock and the lying area.

CUBICLE

RELAX DOUBLE

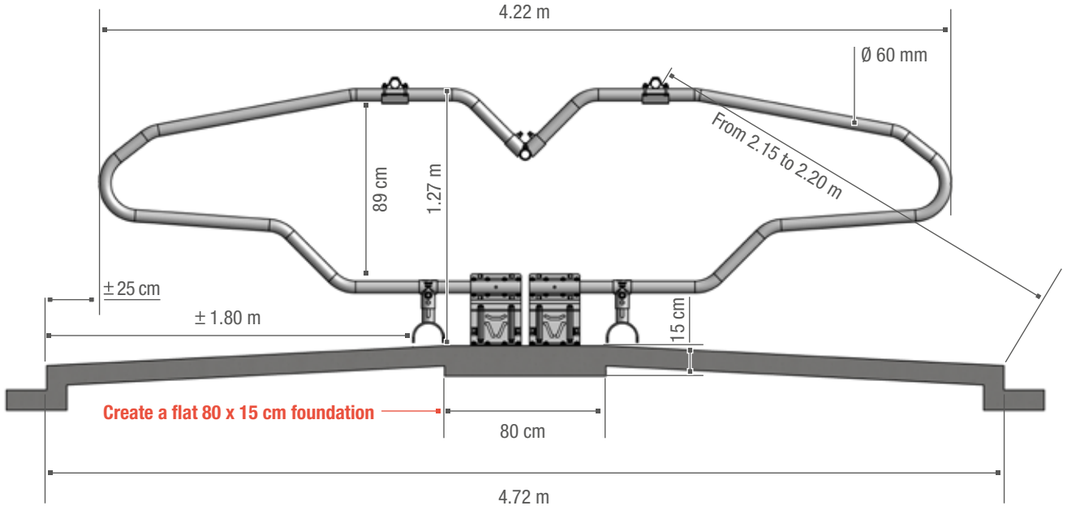

CUBICLE

RELAX

THE TEXANE PROFILE CUBICLE, is made from a single piece of tube Ø 60, length 2.08 m giving a 2,40 m lying area in a single row, or 4,70 m with two rows opposite each other and without posts, held using the "SP support". Not only is the loop attached to the neck bar but it also carries an anti-advancing bar (improved rigidity). This bar is shared in double row cubicles.

LO3160	Cubicle loop RELAX bare L.2.08 m	22 kg
LO3166	Clamp 49/60 mm RELAX	0.9 kg
LO3167	Triple sleeve connector RELAX 60/49 mm	1.6 kg
LO9936	Bracket robust 60/49 mm thickness 4 mm	1.7 kg
TU9756	Tube Ø 49 mm GALVA L.6 m	20 kg
ST9943	Sleeve connector for tube Ø 49 mm	0.5 kg
LO9931	Cubicle support SP for RELAX thickness 6 mm. To bolt to the ground.	8 kg

BRACKET FOR

PVC TUBE Ø 125 MM

Bracket for high pressure PVC tube Ø 125 mm (not supplied). it is adaptable for all models except US and Kondor. It can be adjusted to suit the length and the height of the lying area. Allow one bracket for 2 cubicles.

LO3169	Bracket for PVC tube Ø 125 mm	3 kg

IMPORTANT! In order to prevent corrosion steel in zinc due to prolonged contact with silage, slurry or muck, it is recommended that bituminous paint TR0005 should be applied before use, and periodically thereafter, in order to protect the equipment: post feet, barrier and cubicle bottoms, knee bars, brackets...

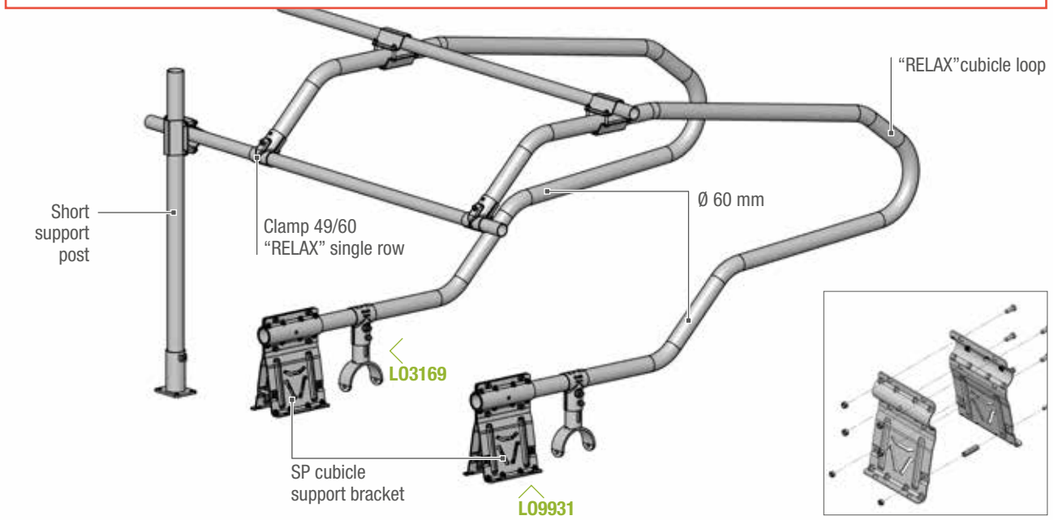

INSTALLATION ADVICE: allow one short support post for every 10 cubicles, which includes one repair end "BP" Ref. LO4500, one Robust bracket Ref. LO9936 and a 1 m Ø 60 mm tube.

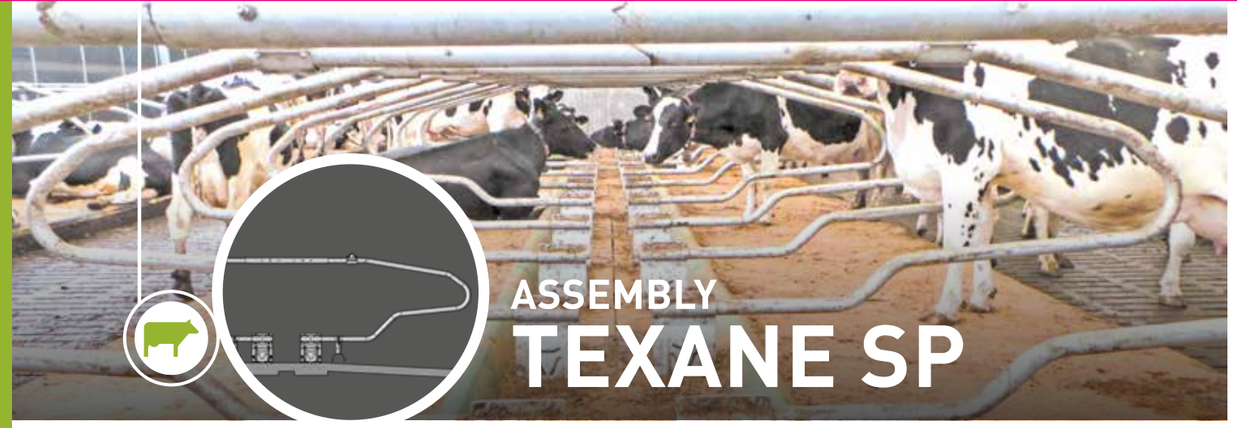

ASSEMBLY

TEXANE SP

CUBICLE

TEXANE 2.08 M DOUBLE SP

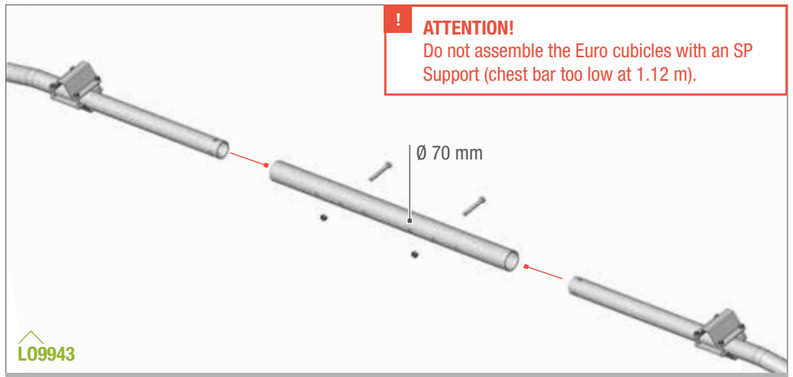

ATTENTION!
Do not assemble the Euro cubicles with an SP Support (chest bar too low at 1.12 m).

LINKAGE BAR TEXANE Ø 70 MM TO BE DRILLED DURING ASSEMBLY

BRACKET ROBUST THICKNESS 4 MM

For cubicles of 1.15 m and 1.20 m from centre to centre. The dimensions are given as an indication. Please adapt them to suit your stock and the lying area.

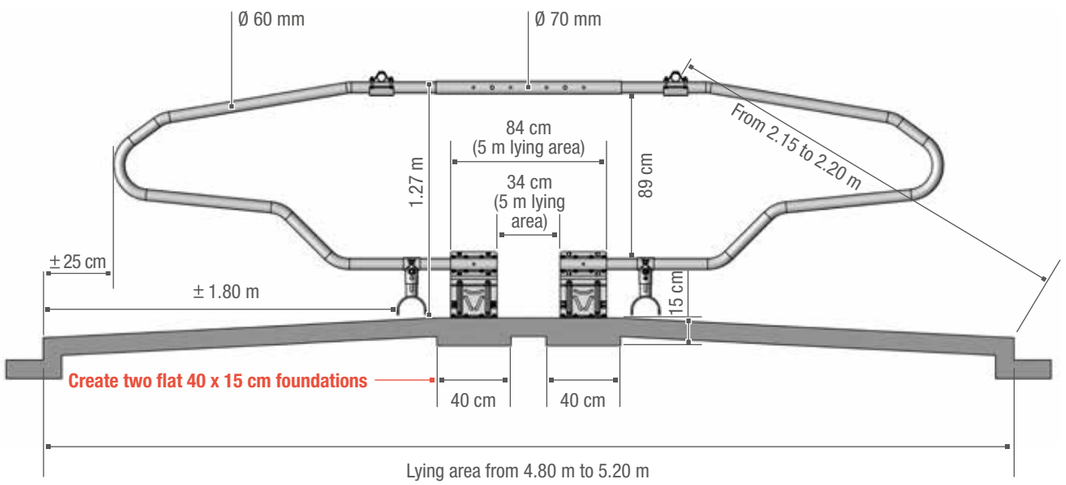

ATTENTION! In order to prevent corrosion steel in zinc due to prolonged contact with silage, slurry or muck, it is recommended that bituminous paint TR0005 should be applied before use, and periodically thereafter, in order to protect the equipment: post feet, barrier and cubicle bottoms, knee bars, brackets.

TEXANE LOOP

LO3103	Cubicle loop TEXANE bare L. 2.08 m	20 kg

TEXANE CONNECTOR

BAR

LO9943	Linkage bar TEXANE Ø 70 mm (to be drilled)	5 kg

BRACKET FOR

PVC TUBE Ø 125 MM

Bracket for high pressure PVC tube Ø 125 mm (not supplied). It is adaptable for all models except US and Kondor. It can be adjusted to suit the length and the height of the lying area. Allow one bracket for 2 cubicles.

LO3169	Bracket for PVC tube Ø 125 mm	3 kg

SP CUBICLE SUPPORT

LO9931	Cubicle support SP thickness 6 mm. To bolt to the ground.	8 kg

PLATE WEDGE

FE2135	Plate wedge 35 x 8 mm L. 197 mm	0.39 kg

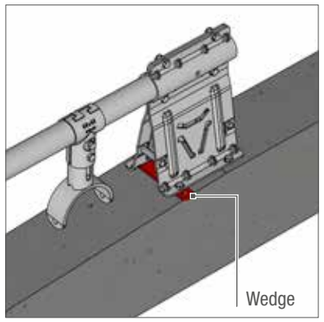

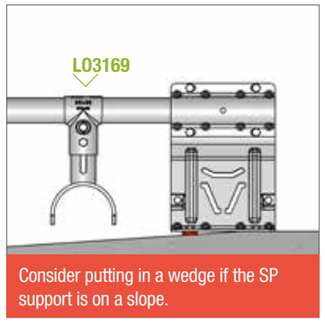

Consider putting in a wedge if the SP support is on a slope.

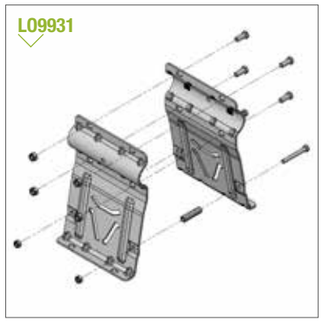

CUBICLE COWFLEX

ASSEMBLY

COWFLEX BLS

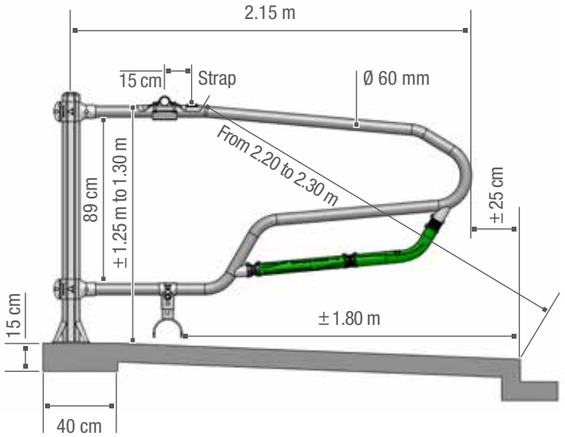

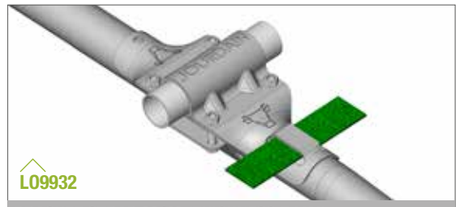

BRACKET STRAP 60/49 (THICKNESS 5 MM)

ADJUSTABLE WALL BRACKET

For cubicles of 1.15 m and 1.20 m from centre to centre. The dimensions are given as an indication. Please adapt them to suit your stock and the lying area.

ASSEMBLY

COWFLEX BLD

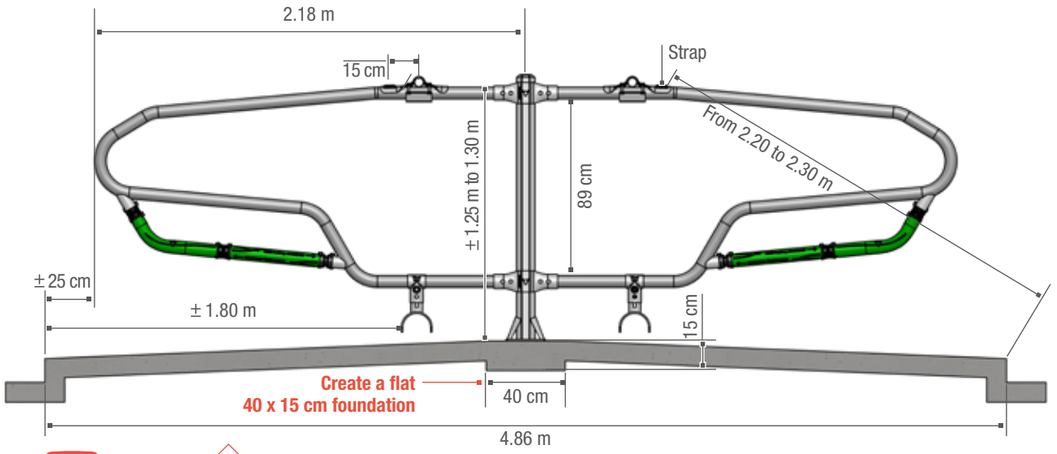

YouTube ENTER JOURDAIN

IMPORTANT! In order to prevent corrosion steel in zinc due to prolonged contact with silage, slurry or muck, it is recommended that bituminous paint TR0005 should be applied before use, and periodically thereafter, in order to protect the equipment: post feet, barrier and cubicle bottoms, knee bars, brackets.

CUBICLE

COWFLEX

THE COWFLEX CUBICLE IS THE IDEAL COMPROMISE BETWEEN RIGIDITY AND FLEXIBILITY. THE TOUGH STEEL FRAME KEEPS THE COW STRAIGHT IN THE CUBICLE PREVENTING THE ANIMAL FROM TURNING AROUND AND SOILING THE LYING AREA.
The lower HDPE covered part has 3 pivot points providing comfort in the cow/cubicle contact zones.The strap bracket (thickness 5 mm) makes the cubicle more rigid; the strap provides more comfortable contact with the chest.

L03208	Cubicle loop COWFLEX bare L.2.08 m	26 kg
L09932	Bracket strap 60/49 thickness 5 mm	2.6 kg
L09933	Adjustable wall bracket (includes 1 Bracket robust + 1 strap tightening plate + 1 Multifix)	6.2 kg
L09944	Webbed strap 50 mm (Roll 62 m)	5.5 kg
L09935	Ratchet handle	1.5 kg
L09936	Bracket robust 60/49 mm thickness 4 mm	1.7 kg
TU9756	Tube Ø 49 mm Bar 6 m (Neck bar)	20 kg
ST9943	Sleeve connector for tube Ø 49 mm	0.5 kg
L09941	Bracket neck bar support Ø 49 mm (unit)	0.6 kg

CUBICLE

COWFLEX BLD ASSEMBLY

(Double Cubicle Bracket) 2 BLD brackets thickness 6 mm - 1 OCTAGONAL post 102 mm - 2 Cubicle loops

L03157	Double cubicle bracket octagonal BLD **(pair)**	7.2 kg

CUBICLE

COWFLEX BLS ASSEMBLY

(Single Cubicle Bracket). 2 BLS brackets thickness 6 mm - 1 OCTAGONAL post 102 mm - 1 Cubicle loop

L03156	Single cubicle brackets OCTAGONAL BLS **(pair)**	5.2 kg

CUBICLE

POST

TR3189	BARE OCTAGONAL cubicle post for setting in 1.66 m	14 kg
TR3190	BARE OCTAGONAL cubicle post plate mounted 1.32 m	15 kg
TR3180	BARE OCTAGONAL cubicle post plate mounted 1.66 m	16 kg

BRACKET FOR

PVC TUBE Ø 125 MM

Bracket for high pressure PVC tube Ø 125 mm (not supplied). It is adaptable for all models except US and Kondor. It can be adjusted to suit the length and the height of the lying area. Allow one bracket for 2 cubicles.

L03169	Bracket for PVC tube Ø 125 mm	3 kg

FLEXIBLE HDPE CURVED BAR

The HDPE covered flexible galvanised curved bar changes shape in order to adapt to the position of the cow, when lying down, and then returns to its original shape thanks to the 3 Cowflex connectors.

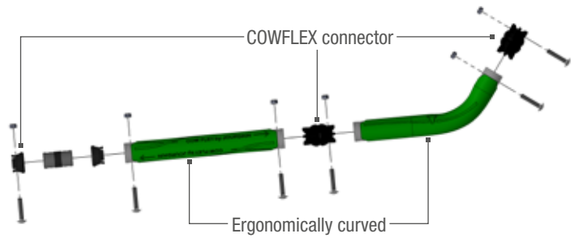

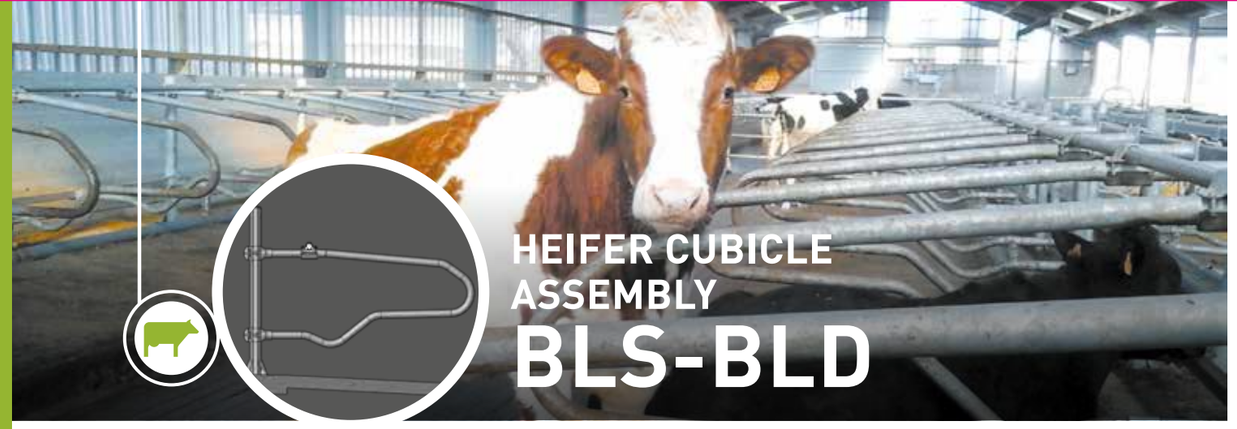

HEIFER CUBICLE ASSEMBLY BLS-BLD

ASSEMBLY

EURO HEIFER BLS

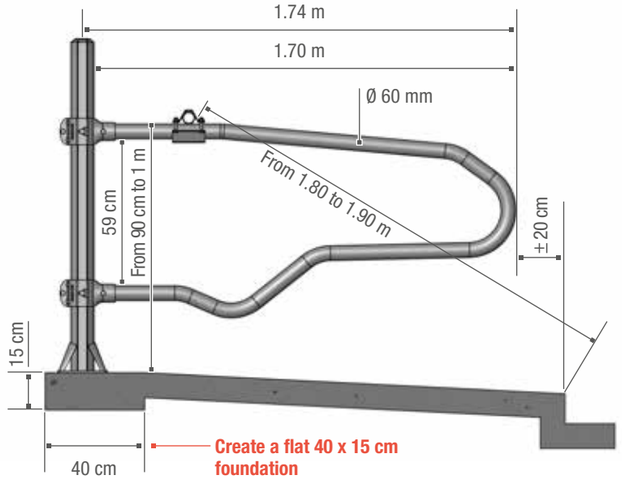

The dimensions are given as an indication. Please adapt them to suit your stock and the lying area.

ASSEMBLY

EURO HEIFER BLD

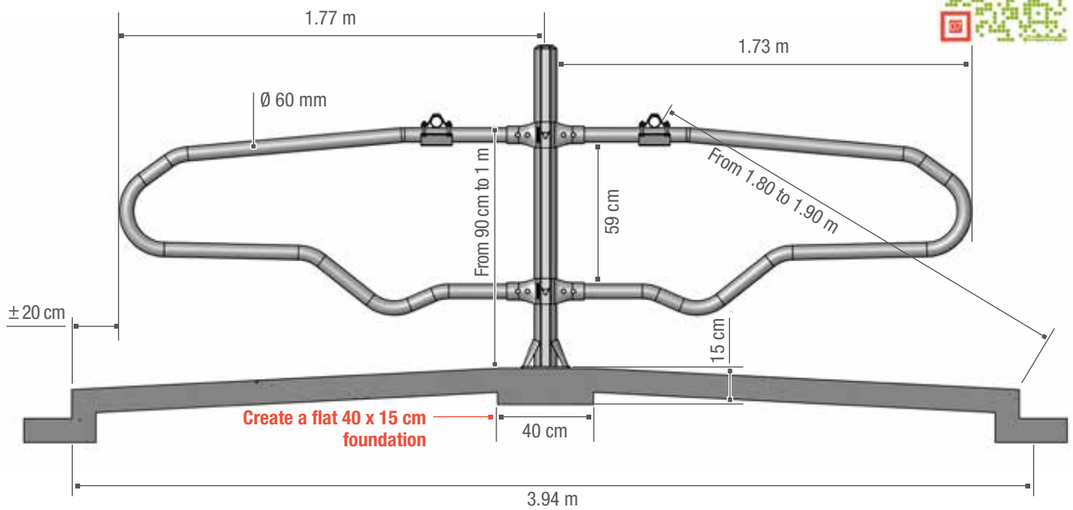

HEIFER LOOP

LO3101	Cubicle loop EURO Heifer bare Ø 60 mm L. 1.70 m	15 kg
LO3105	Cubicle loop US Heifer bare Ø 60 mm L. 1.70 m	15 kg

BLS BRACKET

Allow one post and a pair of BLS brackets per loop.

LO3156	BLS single octogonal cubicle bracket for fixing on octogonal post Ø 102 mm **(pair)**	5.2 kg

BLD BRACKET

Allow one post and a pair of BLD brackets for 2 loops.

LO3157	BLD double octogonal cubicle bracket for fixing on octogonal post Ø 102 mm **(pair)**	7.2 kg

CUBICLE POST

TR3189	Cubicle post OCTAGONAL to be set in L. 1.66 m	14 kg
TR3190	Cubicle post OCTAGONAL on base L. 1.32 m	15 kg

NECK BAR

LO9936	Bracket robust 60/49 mm thickness 4 mm	1.7 kg
TU9756	Tube Ø 49 mm GALVA L.6 m (neck bar)	20 kg
ST9943	Sleeve connector for tube Ø 49 mm	0.5 kg
LO9941	Bracket neck bar support Ø 49 mm (unit)	0.6 kg

FRONTAL BAR

TU9665	Square tube 60 x 60 mm, L. 6 m	30 kg
LO3155	Sleeve square frontal bar 60 x 60 mm	1.6 kg
LO9940	Bracket square frontal bar 60 x 60 mm **(pair)**	1.2 kg

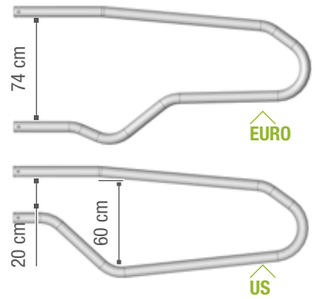

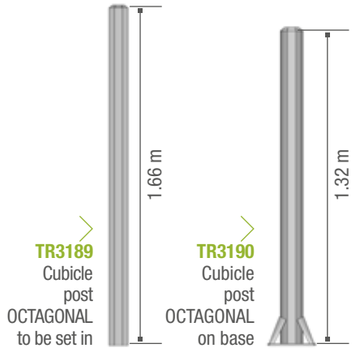

TR3189 Cubicle post OCTAGONAL to be set in

TR3190 Cubicle post OCTAGONAL on base

ST9943 Sleeve connector for tube Ø 49 mm

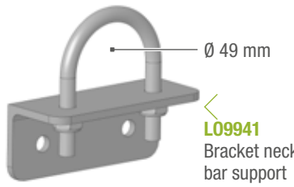

LO9941 Bracket neck bar support

LO3157 DOUBLE OCTAGONAL CUBICLE BRACKET BLD (PAIR)

LO3156 SINGLE CUBICLE BRACKET OCTOGONAL BLS (PAIR)

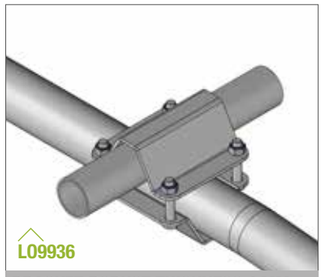

LO9936 BRACKET ROBUST THICKNESS 4 MM

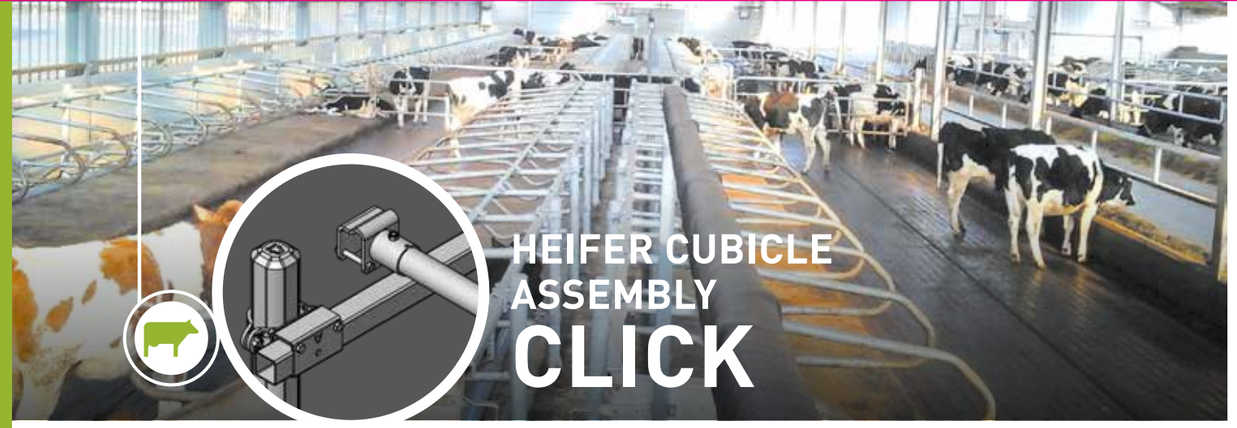

ASSEMBLY

EURO SINGLE HEIFER CLICK

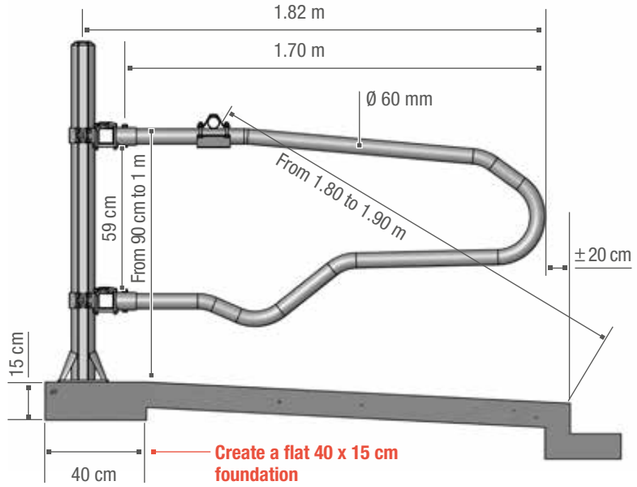

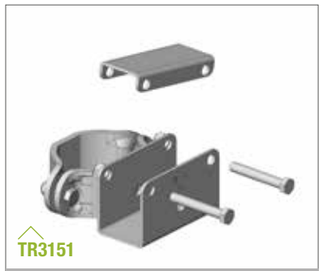

CUBICLE BRACKET OCTOGONAL CLICK SINGLE

The dimensions are given as an indication. Please adapt them to suit your stock and the lying area.

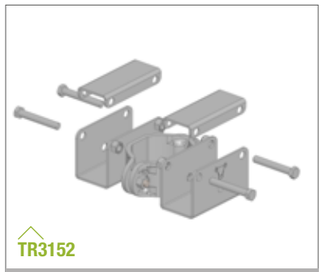

CUBICLE BRACKET OCTOGONAL CLICK DOUBLE

ASSEMBLY

EURO DOUBLE HEIFER CLICK

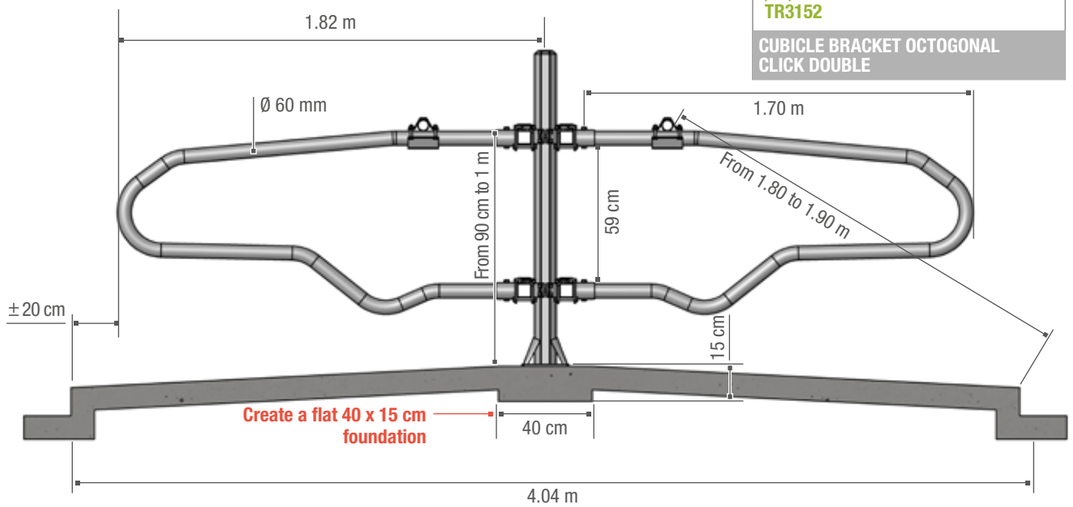

HEIFER LOOP

LO3101	Cubicle loop EURO Heifer bare Ø 60 mm L. 1.70 m	15 kg
LO3105	Cubicle loop US Heifer bare Ø 60 mm L. 1.70 m	15 kg

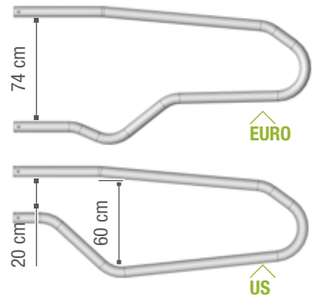

CLICK END

Allow one pair of click ends per loop.

LO3120	Pair of CLICK type ends Ø 70 mm	4.8 kg

CUBICLE

POST

TR3189	Cubicle post OCTAGONAL to be set in L.1,66 m	14 kg
TR3190	Cubicle post OCTAGONAL on base L.1,32 m	15 kg

BRACKET

SINGLE OCTAGONAL CLICK CUBICLE

(2 brackets for 1 post) thickness 8 mm

TR3151	Cubicle bracket OCTAGONAL click single (unit)	3.2 kg

BRACKET

DOUBLE OCTAGONAL CLICK CUBICLE

(2 brackets for 1 post) thickness 8 mm

TR3152	Cubicle bracket OCTAGONAL click double (unit)	4.7 kg

NECK BAR

LO9936	Bracket robust 60/49 mm thickness 4 mm	1.7 kg
TU9756	Tube Ø 49 mm GALVA L.6 m (neck bar)	20 kg
ST9943	Sleeve connector for tube Ø 49 mm	0.5 kg
LO9941	Bracket neck bar support Ø 49 mm (unit)	0.6 kg

FRONTAL BAR

TU9665	Square tube 60 x 60 mm, L. 6 m	30 kg
LO3155	Sleeve square frontal bar 60 x 60 mm	1.6 kg
LO9940	Bracket square frontal bar 60 x 60 mm **(pair)**	1.2 kg

BRACKET ROBUST THICKNESS 4 MM

LO9940
Bracket square frontal bar

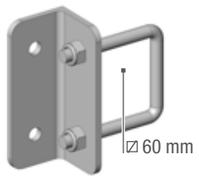

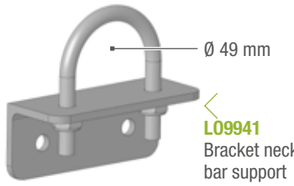

LO9941
Bracket neck bar support

LO3155
Sleeve square frontal bar

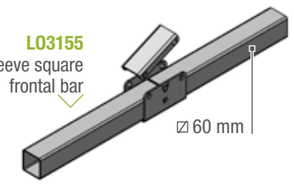

CUBICLE KONDOR

CUBICLE

KONDOR

THIS CUBICLE REPRODUCES THE EXACT FORM OF THE TEXANE CUBICLE AND ITS POST.

It is not adjustable. It is not as strong as a BLS/BLD assembly and can be subject to more corrosion on the front foot. It is attached by Ø 12 mm rawl bolts, bolted straight into the lying area base. As an option, it is possible to add a PVC Ø 125 mm knee bar. Allow a knee bar bracket for every 2 cubicles.

L03112	Cubicle loop type Kondor - L. 2.05 m	27 kg
L03113	Cubicle loop Kondor on plate for Heifers L. 1.80m	22.5 kg
L09939	Bracket for PVC tube Ø 125 mm for Kondor cubicle	1.4 kg

ST9943
Sleeve connector for tube Ø 49 mm

NECK BAR

L09936	Bracket Robust thickness 4 mm	1.7 kg
TU9756	Tube Ø 49 mm 6 m bar (neck bar)	20 kg
ST9943	Sleeve connector for tube Ø 49 mm	0.5 kg
L09941	Bracket neck bar support (unit)	0.6 kg

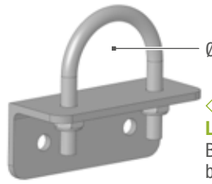

L09941
Bracket neck bar support

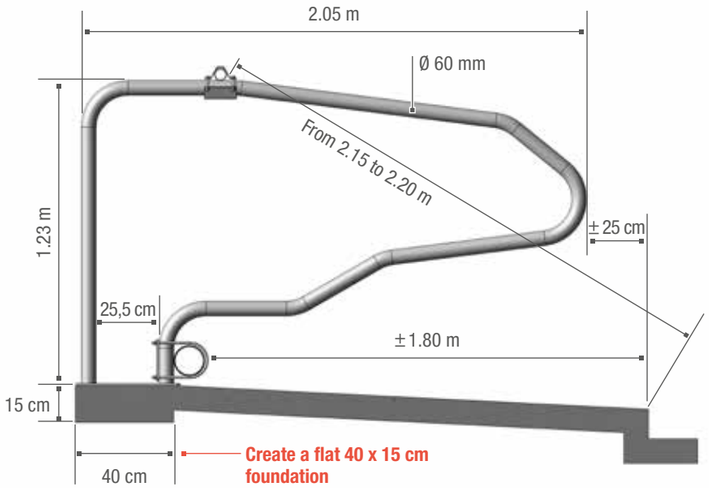

L09939

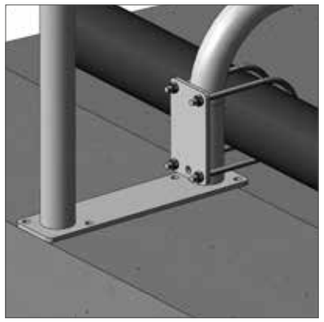

For cubicles of 1.15 m and 1.20 m from centre to centre. The dimensions are given as an indication. Please adapt them to suit your stock and the lying area.

! **IMPORTANT!** In order to prevent corrosion steel in zinc due to prolonged contact with silage, slurry or muck, it is recommended that bituminous paint TR0005 should be applied before use, and periodically thereafter, in order to protect the equipment: post feet, barrier and cubicle bottoms, knee bars, brackets...

ROUND BALE HAY RACK P.T.F. - P.T.O.

HAY RACK

ROUND BALE TYPE P.T.F.

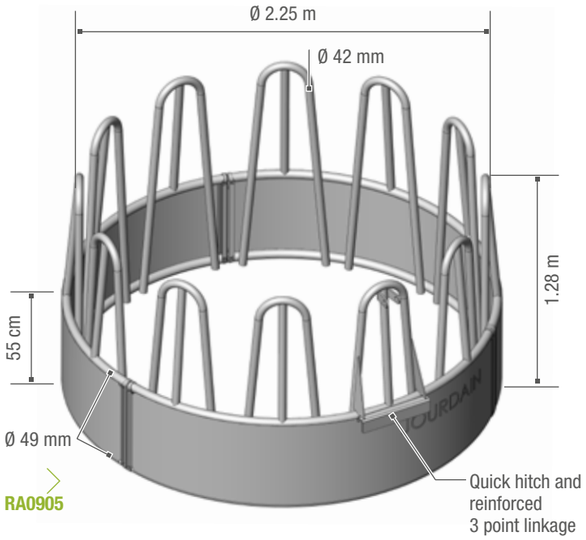

RA0905

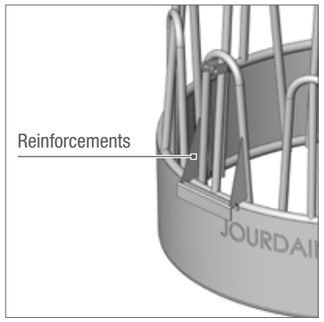

REINFORCED TOMBSTONES

HAY RACK

ROUND BALE TYPE P.T.O.

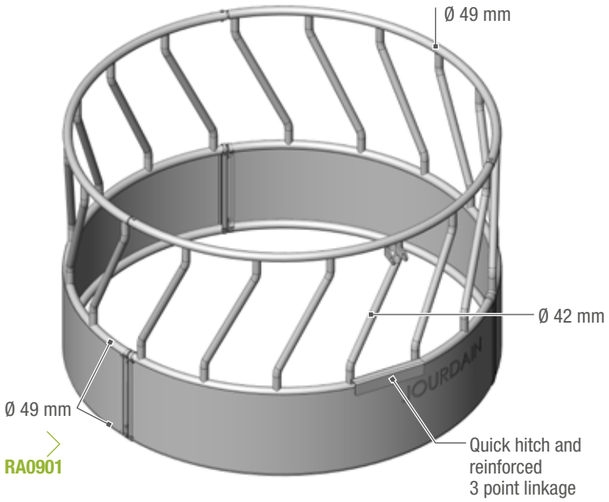

RA0901

ADAPTABLE ROOF

FOR P.T.F. AND P.T.O.

RA0902
OPTION:
Tilting roof for filling

ROUND BALE HAY RACK

TYPE P.T.F.

12 HEAD SPACES FOR HORNED ANIMALS. COMPRISING THREE SECTIONS 1 OF WHICH THAT CAN BE MADE TO OPEN. (See option).
Curved tube Ø 49 mm.

RA0905	P.T.F.	(Pack x 4)	193 kg

ROUND BALE HAY RACK

TYPE P.T.O.

18 DIAGONAL HEAD SPACES. Comprising 3 curved sections tube Ø 49 mm. 3 part design.

RA0901	P.T.O.	150 kg

ADAPTABLE TIPPING ROOF

TUBULAR FRAME WITH GALVANISED STEEL SHEETS of 2.25 m, thickness 63/100ths.

RA0902	Roof adaptable PTF/PTO	70 kg

When transporting the hay rack, comply with the highway code.

HAY RACK 4 FACES

4 FACES
TYPE FESTON

Reinforced by an upper framework Ø 60 mm

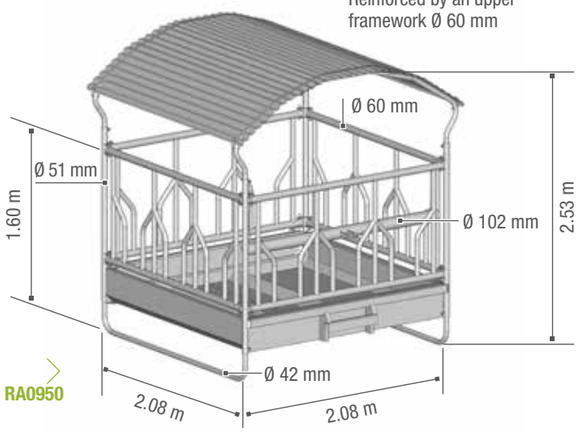

RA0950

4 FACES
TYPE P.T.F.

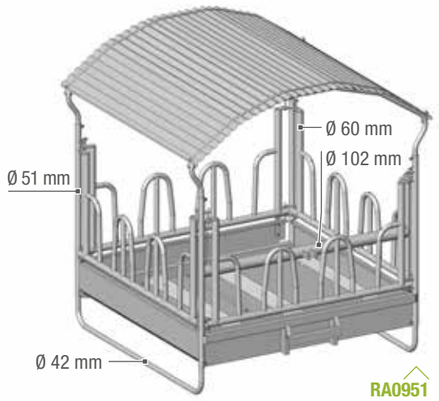

RA0951

High clearance version for heavily horned animals - Beam Ø 60 mm

4 FACES
TYPE SAFETY®

12 adjustable yoked SAFETY® IV HEADLOCKS with automatic moving arm return (for dehorned animals)

RA0952

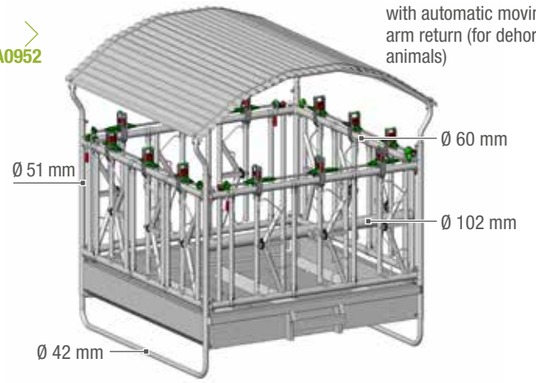

4 FACES
TYPE DIAGONAL

RA0953

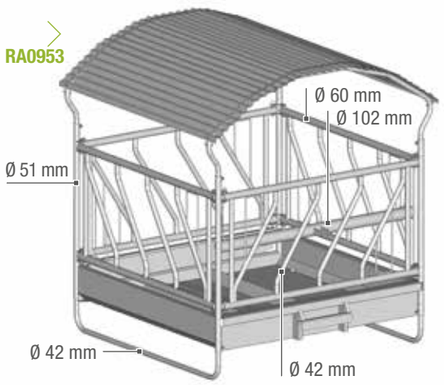

INTEGRAL OPENING ON ALL MODELS

INTERNAL DOUBLE FOLDS TO PREVENT INJURY

RA0975

INTEGRAL ROOF GUARDS FOR 4 FACES HAY RACKS

HAY RACK
"4 FACES" - 2 M X 2 M

- 12 head spaces for feeding.
- Trough thickness 20/10th reinforced with two large folds, and internal counter folds on the 4 sides (injury prevention). Depth 400 mm. Bale Ø 1.80 m max 300 kg.
- 1 side with OPENING TROUGH SIDE to ease filling and cleaning.
- Full corrugated steel roof 2.25 m, thickness 63/100th.
- Pivoting three-point linkage Ø 102 mm, skids to enable it to be dragged for short distances.

Only move the hay rack when it is empty. WHEN TRANSPORTING THE HAY RACK COMPLY WITH THE HIGHWAY CODE.

- Delivered in KIT form. Flat packed.

RA0950	HAY RACK "4 FACES" FESTON	(Pack x 4)	370 kg
RA0951	HAY RACK "4 FACES" PTF	(Pack x 4)	360 kg
RA0952	HAY RACK "4 FACES" SAFETY IV	(Pack x 3)	480 kg
RA0953	HAY RACK "4 FACES" DIAGONAL	(Pack x 4)	360 kg
RA0957	HAY RACK "4 FACES" FOR HORSES	(Pack x 2)	480 kg

4 BIG BALE HAY RACK PACKAGE SIZE

1.55 m x 2.30 m x 1.35 m high

PARTS SUPPLIED INDIVIDUALLY

RA0992	Side 3 places TYPE FESTON	L = 1.95 m	31 kg
RA0996	Side 3 places TYPE PTF	L = 1.95 m	30 kg
RA0998	Side 3 places TYPE SAFETY® IV	L = 1.95 m	60 kg
RA0994	Side 3 places TYPE DIAGONAL	L = 1.95 m	27 kg
RA0983	Side 3 places HORSES		53 kg
RA0912	Chassis 4 places without sides		240 kg
RA7020	Reinforcement for trough hay rack "4 faces" Ø 70 mm	L = 1.97 m **(pair)**	20 kg

OPTIONS
FOR 4 FACES HAY RACKS

(THESE 3 OPTIONS ARE INCLUDED IN THE 4 FACES HORSE HAY RACK RANGE)

RA0975	Roof guard for horse hay rack "4 faces" Comprising two gutters 4 faces 2.25 m and to 2 integral guards	24 kg
RA0977	Guard three point hitch frame green Comprising a green lower guard and a Ø 20 mm locking pin	3 kg
RA0986	Guard for hay rack "4 faces" and Big Bale (8 pieces)	12.8 kg

MODEL INTENDED FOR HORSES

RA0957

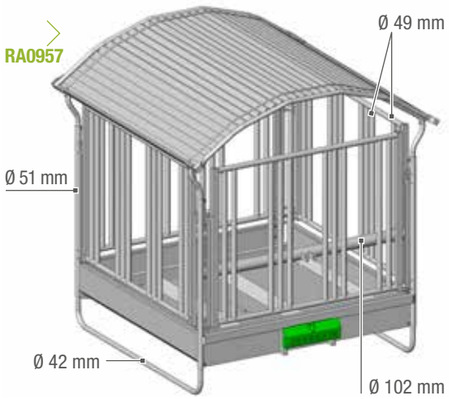

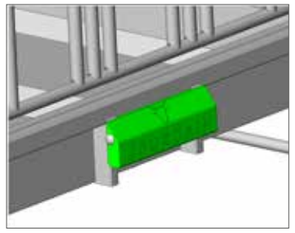

RA0977

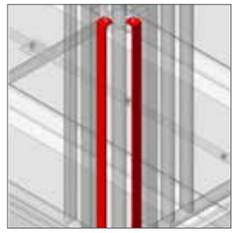

RA0986

HAY RACK
BIG BALE

BIG BALE
TYPE FESTON

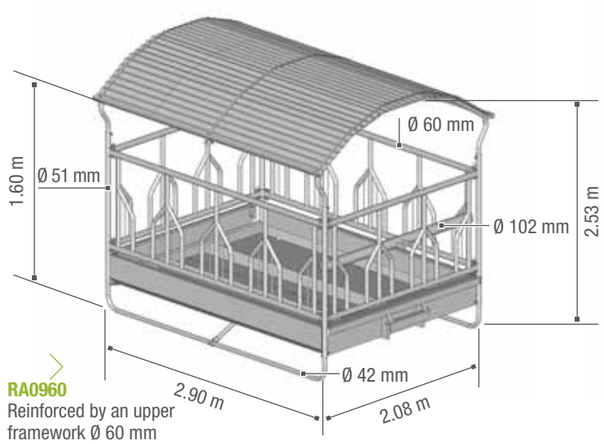

RA0960
Reinforced by an upper framework Ø 60 mm

BIG BALE
TYPE P.T.F.

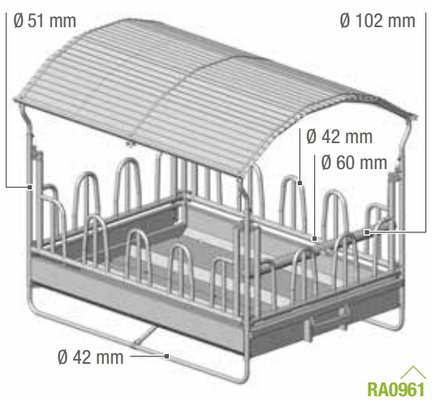

RA0961
High clearance version for heavily horned animals - Beam Ø 60 mm

BIG BALE
TYPE SAFETY®

RA0962

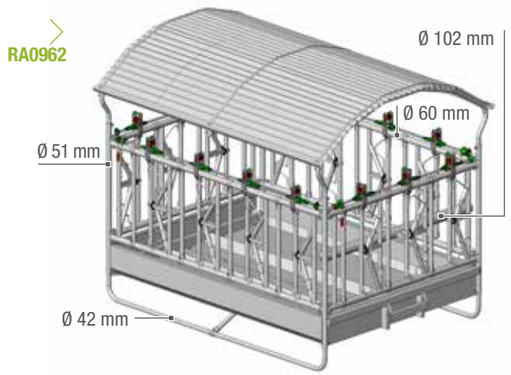

- 14 SAFETY IV' headlocks with automatic moving arm return (for dehorned animals)
- Adjustable yoke
- Frame Ø 60 mm

INTERNAL DOUBLE FOLDS TO PREVENT INJURY

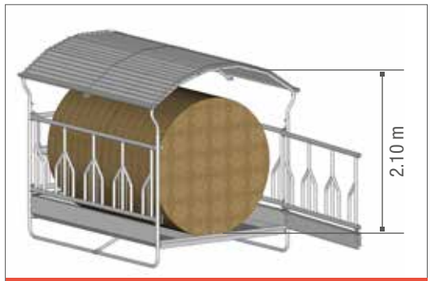

INTEGRAL OPENING ON ALL MODELS

HAY RACK
"BIG BALE" - 2 M X 3 M

- 14 head spaces for feeding, 3 opening sides for 1 square bale or 2 upright round bales.
- Trough thickness 20/10th reinforced with two large folds, and internal counter folds on the 4 sides (injury prevention). Depth 400 mm.
- 1 side with OPENING TROUGH SIDE to ease filling and cleaning.
- Transversal reinforcing with a bar linking the two 2 ski feet.
- Full corrugated steel roof 3 m, thickness 63/100th. Roof reinforced by a central bar, and tube gutters protecting the steel sheets.
- Pivoting three-point linkage Ø 102 mm, skids to enable it to be dragged for short distances.

Only move the hay rack when it is empty. WHEN TRANSPORTING THE HAY RACK COMPLY WITH THE HIGHWAY CODE.
- Delivered as a KIT. Flat packed.

RA0960	HAY RACK BIG BALE FESTON	(Pack x 2)	490 kg
RA0961	HAY RACK BIG BALE PTF	(Pack x 2)	475 kg
RA0962	HAY RACK BIG BALE SAFETY IV	(Pack x 2)	625 kg
RA0967	HAY RACK BIG BALE FOR HORSES	(Pack x 2)	630 kg

4 BIG BALE HAY RACK PACKAGE SIZE

1.60 m x 3.10 m x 1.40 m high. Completely flat packed individually with roof sheets.

PARTS SUPPLIED INDIVIDUALLY

RA0991	Side 4 places Big Bale FESTON	L = 2.77 m	47 kg
RA0995	Side 4 places Big Bale PTF	L = 2.77 m	41 kg
RA0997	Side 4 places Big Bale SAFETY® IV	L = 2.77 m	84 kg
RA0985	Side 5 places hay rack Big Bale HORSES		69 kg
RA0947	Chassis Big Bale without sides	L = 2.77 m	335 kg
RA7028	Reinforcement for trough hay rack Big Bale ø 70 mm	L = 2.80 m **(pair)**	28 kg

OPTIONS
FOR BIG BALE HAY RACKS

(THESE 3 OPTIONS ARE INCLUDED IN THE BIG BALE HORSE HAY RACK RANGE)

RA0976	Integral roof guard for hay rack Big Bale Comprising 2 integral guards.	18 kg
RA0977	Guard three point hitch frame green Comprising a green lower guard and a Ø 20 mm locking pin.	3 kg
RA0986	Guard for hay rack "4 faces" and Big Bale (8 pieces)	12.8 kg

RA7028
Trough reinforcement

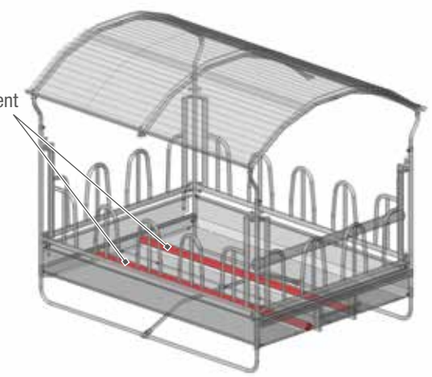

BIG BALE
MODEL INTENDED FOR HORSES

RA0967

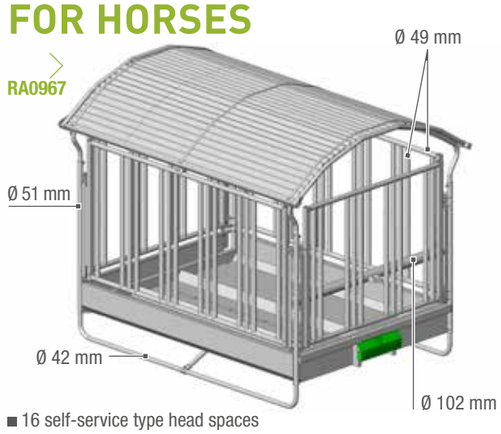

- 16 self-service type head spaces

MODULAR COW HAY RACK

MODULAR HAY RACK FOR ADULT ANIMALS. THE DIFFERENT PARTS ARE BOLTED TOGETHER. IT IS DESIGNED TO BE TOUGH, AND IT IS MADE USING TUBES OF Ø 27 MM AND Ø 34 MM, WITH A STEEL SHEETED BACK. The ends are sheeted for animal safety and the hay rack can be attached to the bars of EX 4 and EX 5 barriers. It can also be wall mounted. The hay rack is delivered in kit form in lengths of 1 m and 2 m.

RA0711	Modular cow hay rack L. 1 m	(Pack x 6)	46.3 kg	NEW
RA0712	Modular cow hay rack L. 2 m	(Pack x 6)	72.2 kg	NEW

MODULAR COW HAY RACK

RA0711 L. 1 m

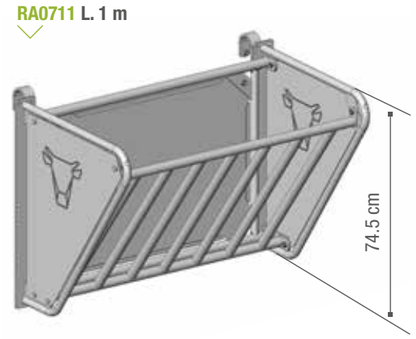

RA0712 L. 2 m

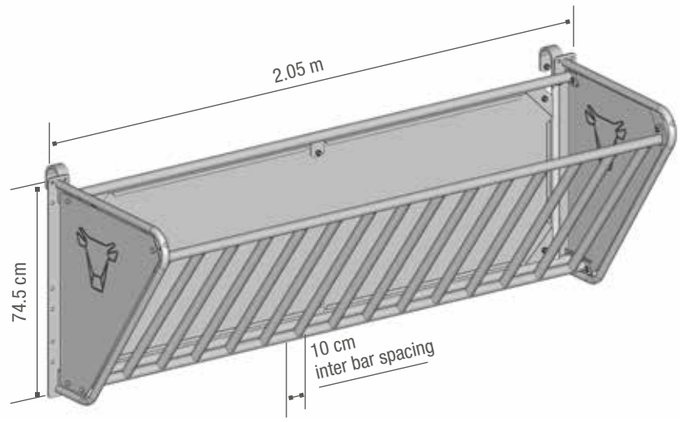

RA0711

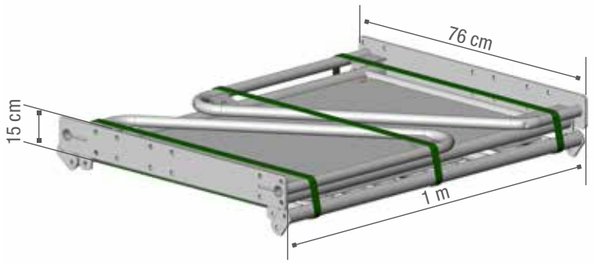

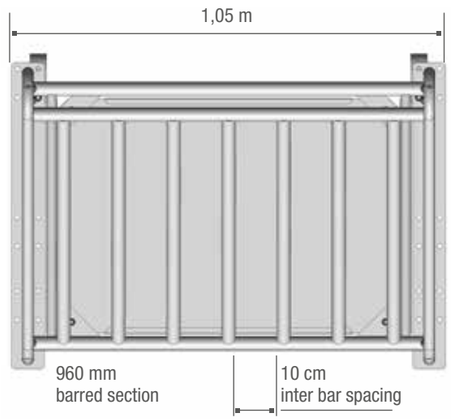

RA0712

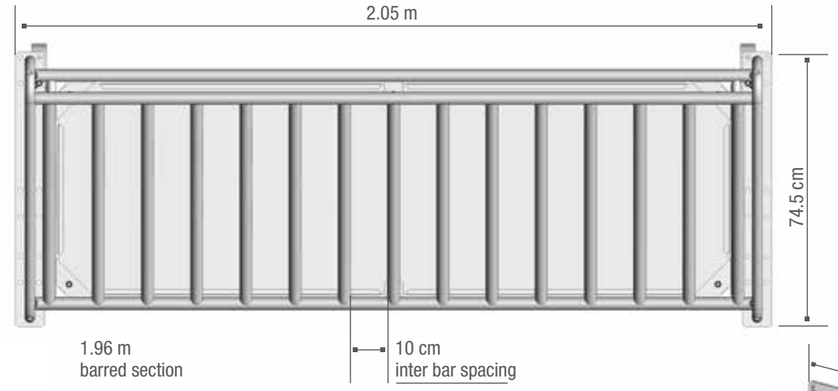

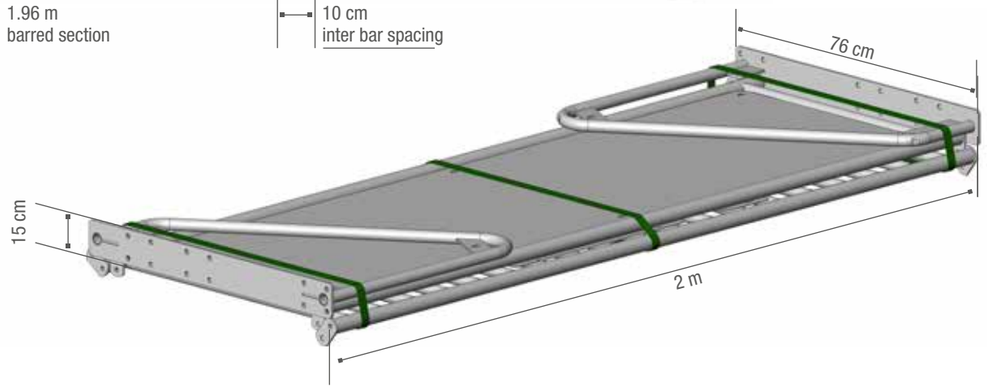

FEEDER

FEEDER FOR
LARGE CATTLE

N08010

NECK AND ROOF GUARDS FITTED AS STANDARD

LOCKING ROOF

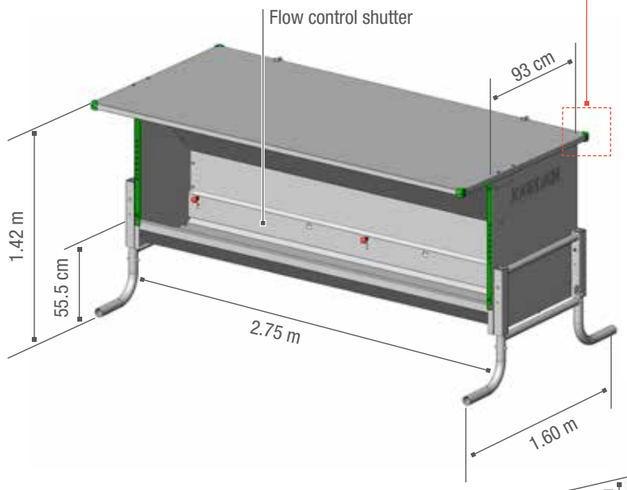

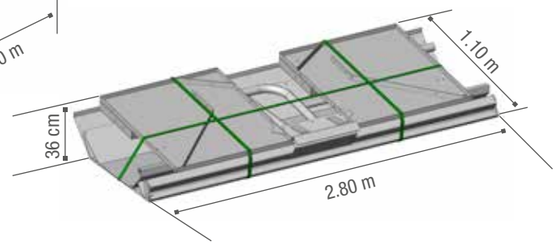

HIGH-CAPACITY ANTI-WASTE TROUGH. FEEDING ADULT CATTLE, EVEN IF THEY ARE HEAVILY HORNED IS POSSIBLE WITHOUT THE CREEP ENCLOSURE.

- Well sheltered anti-waste trough with overhanging roof. Adjustable flow.
- With the rear mounted 3 point hitch when it is empty and the enclosure demounted.

WHEN TRANSPORTING IT ON THE ROAD COMPLY WITH THE HIGHWAY CODE.

FEEDER LARGE ANIMAL 2 M			
N07010	Feeder large animal 2 m (Capacity 950 litres)	(Pack x 2)	251 kg
BIG FEEDER LARGE ANIMAL 2.80 M			
Back reinforced with 70 mm square tube for transport when empty.			
N08010	Big feeder large animal 2.80 m flat packed (Capacity 1,350 litres)	(Pack x 2)	362 kg

ANTI-CLOCKWISE HANDLING SYSTEM

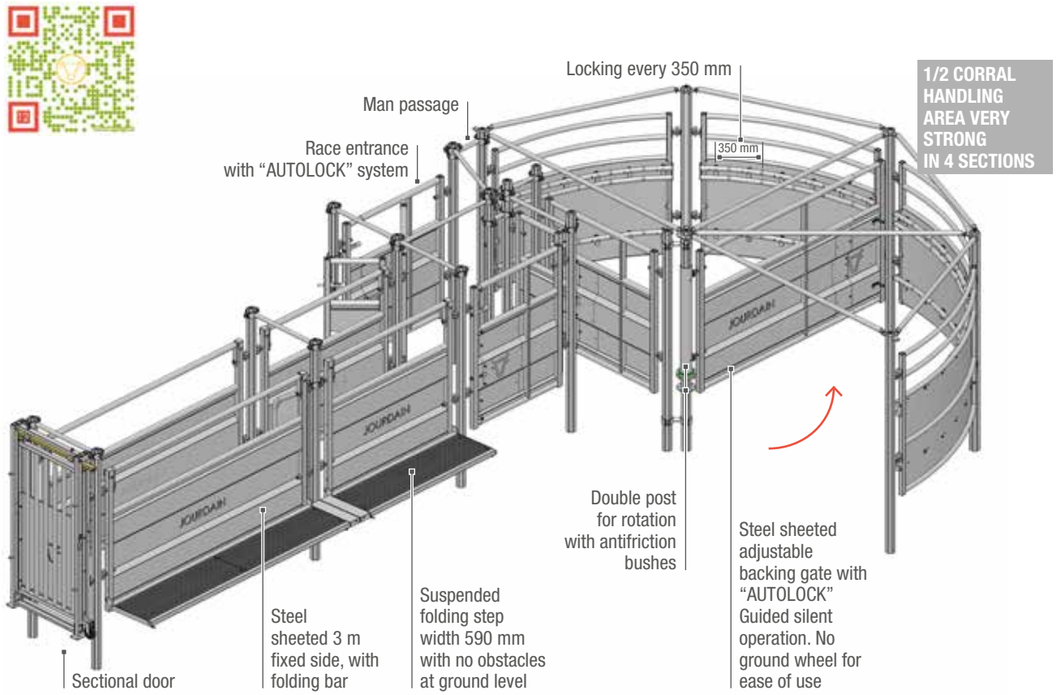

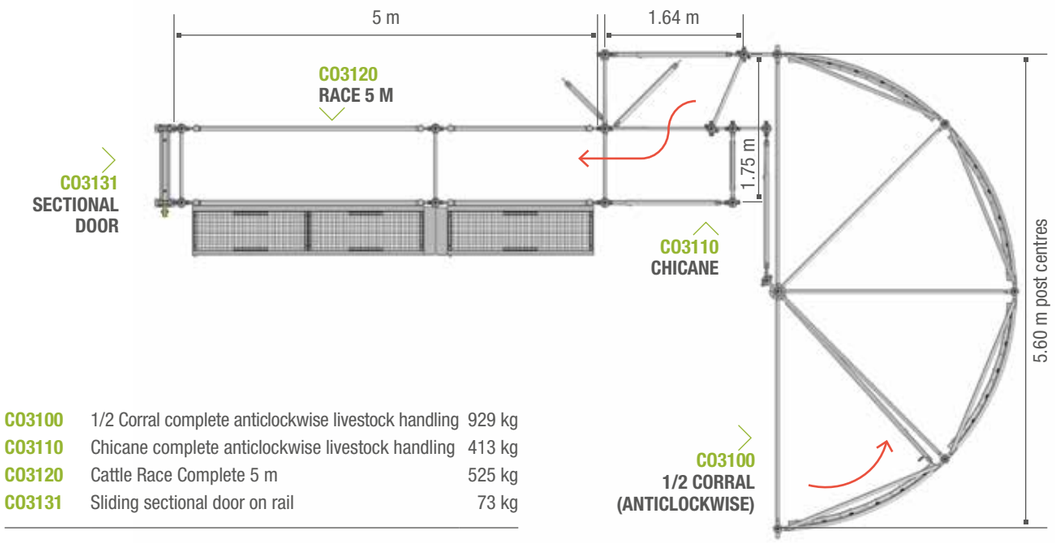

CO3100	1/2 Corral complete anticlockwise livestock handling	929 kg
CO3110	Chicane complete anticlockwise livestock handling	413 kg
CO3120	Cattle Race Complete 5 m	525 kg
CO3131	Sliding sectional door on rail	73 kg

CLOCKWISE HANDLING SYSTEM

YouTube ENTER JOURDAIN

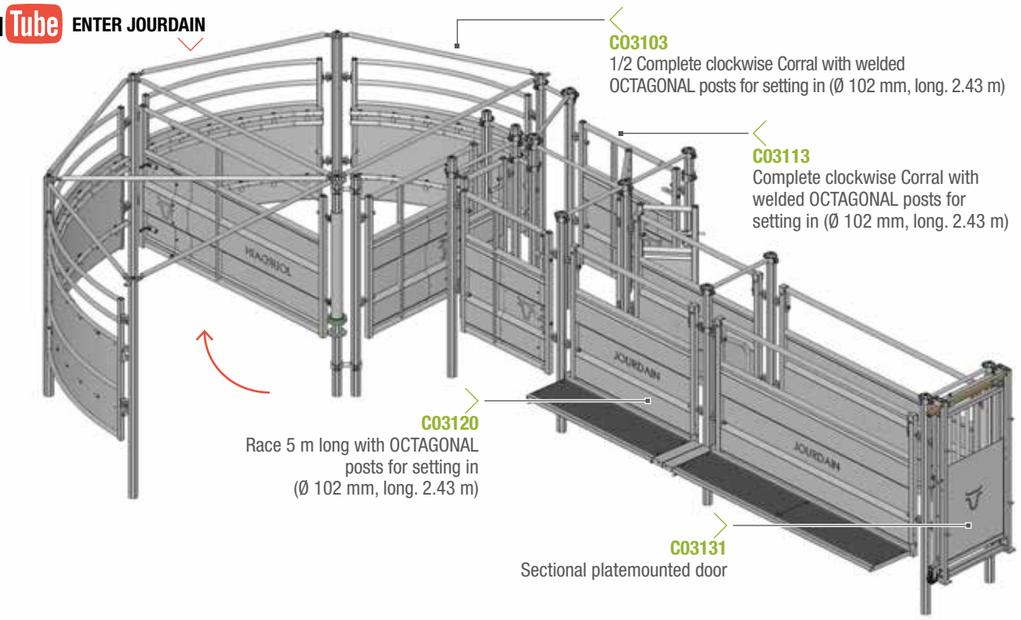

! **IMPORTANT!**
Please follow the handling area assembly instructions.

CO3103	1/2 Corral complete clockwise livestock handling	929 kg
CO3113	Chicane complete clockwise livestock handling	413 kg
CO3120	Cattle Race Complete 5 m	525 kg
CO3131	Sliding sectional door on rail	73 kg

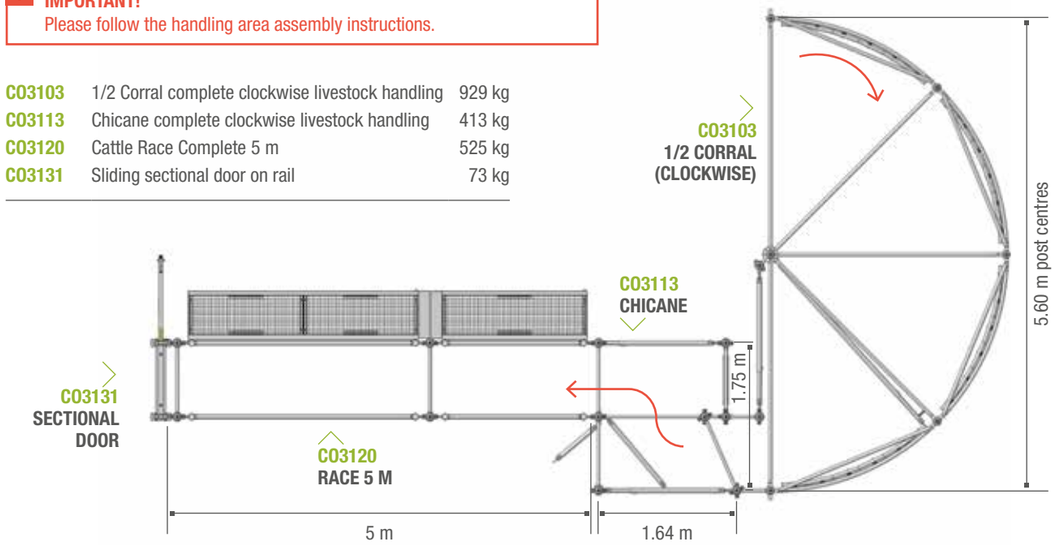

1/2 CORRAL
HOLDING PEN

1/2 CORRAL
ANTI-CLOCKWISE

CO3100

! ATTENTION!
The handling area posts must be set in.

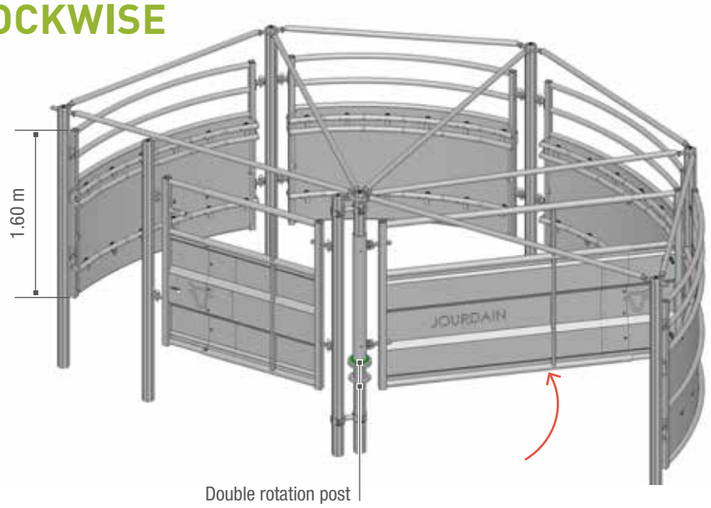

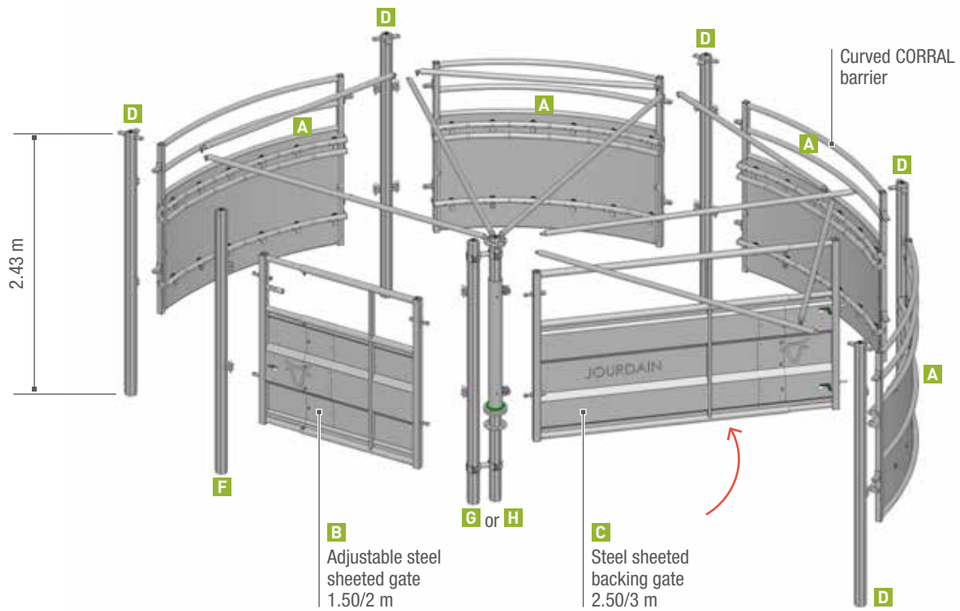

1/2 CORRAL HOLDING PEN

The 1/2 CORRAL holding pen enables a stockman to move animals safely by using a rotating steel sheeted barrier. The handling system is both strong and quiet.

PLEASE USE THE HANDLING AREA POSTS. STANDARD WELDED POSTS OR BARE POSTS WITH BRACKETS ARE NOT SUITABLE.

COMPLETE 1/2 CORRAL HOLDING PEN		
CO3100	1/2 Corral complete anticlockwise livestock handling	929 kg
CO3103	1/2 Corral complete clockwise livestock handling	929 kg

COMPRISING:

- 4 complete curved corral barriers A
- 1 adjustable steel sheeted handling pen barrier 1.50/2 m B
- 1 adjustable steel sheet backing gate 2.50/3 m C
- 5 cattle corral OCTAGONAL posts 2 way Ø102 mm for setting in L.2.43 m D
- 1 cattle corral OCTAGONAL post 1 way Ø102 mm for setting in L.2.43 m F
- 1 double anti-clockwise rotation post with anti-friction bushes G or 1 double clockwise rotation post with antifriction bushes H
- 1 set of reinforcing and assembly bars with brackets I

PARTS SUPPLIED INDIVIDUALLY			
Reference			
A	CO3104	Barrier curved CORRAL (complete)	104 kg
B	CO3105	Sheeted barrier adjustable 1.50/2 m	70 kg
	CO3106	Sheeted barrier adjustable 2/2.50 m	84 kg
	CO3107	Sheeted barrier adjustable 2.50/3 m	97 kg
C	CO3108	Sheeted backing gate adjustable 2.50/3 m	97 kg
D	CO9901	Post D cattle corral OCTAGONAL 2 way L.2.43 m	27 kg
F	CO9906	Post F cattle corral OCTAGONAL 1 way L.2.43 m	25 kg
G	CO9904	Double post G rotation anticlockwise	73 kg
H	CO9905	Double post H rotation clockwise	73 kg
I	CO9907	Set of bars for assembly and reinforcement with brackets	137 kg

The adjustable steel sheeted barriers ref. CO3105 / CO3106 / CO3107 are delivered with 4 eyebolts, they can be adapted to make an AUTOLOCK gate by buying a sack SAC 182.
The backing gate ref. CO3108 is made up of an AUTOLOCK front that is only suitable for use with the 1/2 Corral.
The 1/2 Corral posts are 2.43 m long with flat plates welded to them in order to receive the spreading bars. In order to have a robust system, do not use demounting sleeves.

! IMPORTANT!
In order to prevent corrosion steel in zinc due to prolonged contact with silage, slurry or muck, it is recommended that bituminous paint TR0005 should be applied before use, and periodically thereafter, in order to protect the post feet.
Please follow the handling system assembly instructions carefully.

CATTLE HANDLING
CHICANE

CHICANE

CO3110

! ATTENTION!
The handling area posts must be set in.

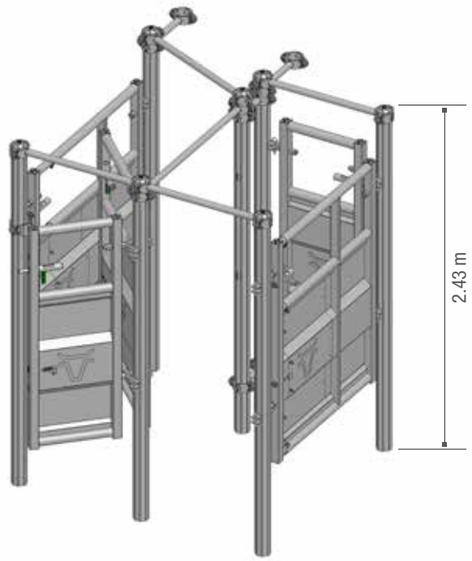

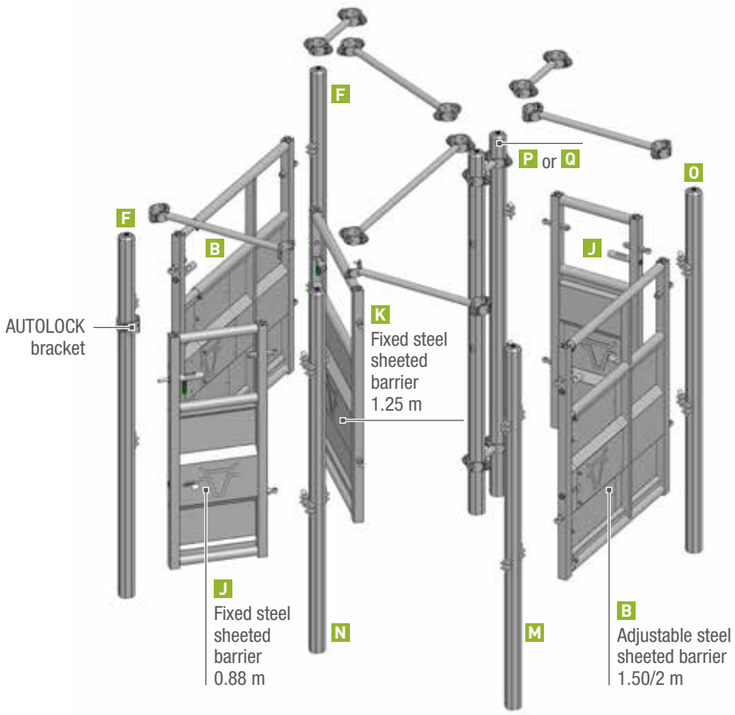

CATTLE HANDLING CHICANE

FOR FIXED RACE

The chicane sorting gates enable animals to be sorted and either sent up the race, or in another direction e.g.to a loading ramp. The chicane gates also prevent animals that are in the race from reversing back into the CORRAL holding pen.

PLEASE USE THE HANDLING AREA POSTS.STANDARD WELDED POSTS OR BARE POSTS WITH BRACKETS ARE NOT SUITABLE.

CO3110	Chicane complete anticlockwise livestock handling	413 kg
CO3113	Chicane complete clockwise livestock handling	413 kg

COMPRISING:

- 2 sheeted barrier adjustable 1.50/2 m B
- 2 gates sheeted fixed 0.88 m J
- 1 gate sheeted fixed 1.25 m K
- 2 cattle corral OCTAGONAL posts 1 way Ø102 mm for setting in L.2.43 m F
- 1 bracket Ø 102 mm single bolt support AUTOLOCK
- 1 cattle chicane/race OCTAGONAL post 2 way Ø 102 mm for setting in L.2.43 m M
- 1 cattle chicane OCTAGONAL post 3 way Ø 102 mm for setting in L.2.43 m N
- 1 cattle chicane OCTAGONAL post 2 way L form Ø 102 mm for setting in L.2.43 m O
- 1 double post no reverse L.2.43 m anticlockwise P or 1 double post no reverse for setting in L.2.43 m clockwise Q

PARTS SUPPLIED INDIVIDUALLY

Reference			
B	CO3105	Sheeted barrier adjustable 1.5/2 m	70 kg
J	CO3114	Gate J sheeted fixed L.0.88 m	31 kg
K	CO3115	Gate K sheeted fixed L.1.25 m	43 kg
F	CO9906	Post F cattle corral OCTAGONAL 1 way L.2.43 m	25 kg
	FE2153	Bracket Ø 102 mm single bolt support AUTOLOCK (unit)	3 kg
M	CO9912	Post M cattle chicane/race OCTAGONAL 2 way L.2.43 m	26 kg
N	CO9913	Post N cattle chicane OCTAGONAL 3 way L.2.43 m	27 kg
O	CO9914	Post O cattle chicane OCTAGONAL 2 way L form L.2.43 m	26 kg
P	CO9915	Double post P no reverse anticlockwise	54 kg
Q	CO9916	Double post Q no reverse clockwise	54 kg

CHICANE
ANTI-CLOCKWISE INSTALLATION

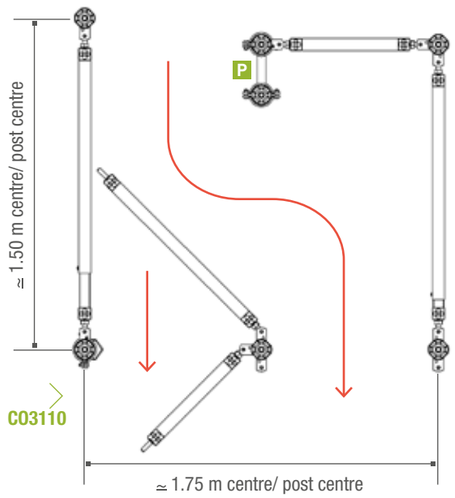

CHICANE
CLOCKWISE INSTALLATION

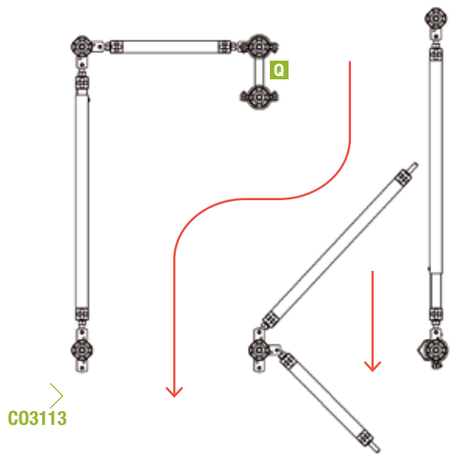

! ATTENTION!
Please follow the Corral assembly instructions carefully.

The chicane posts are 2.43 m long. In order to have a robust system, do not use disassembly sleeves.

FIXED RACE

5 M RACE

FOR SETTING IN

CO3120

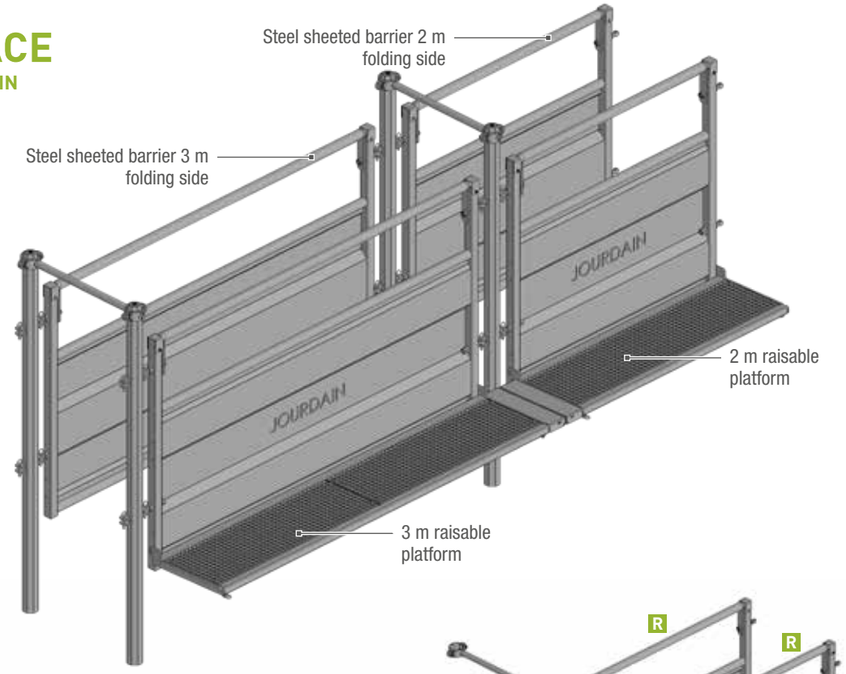

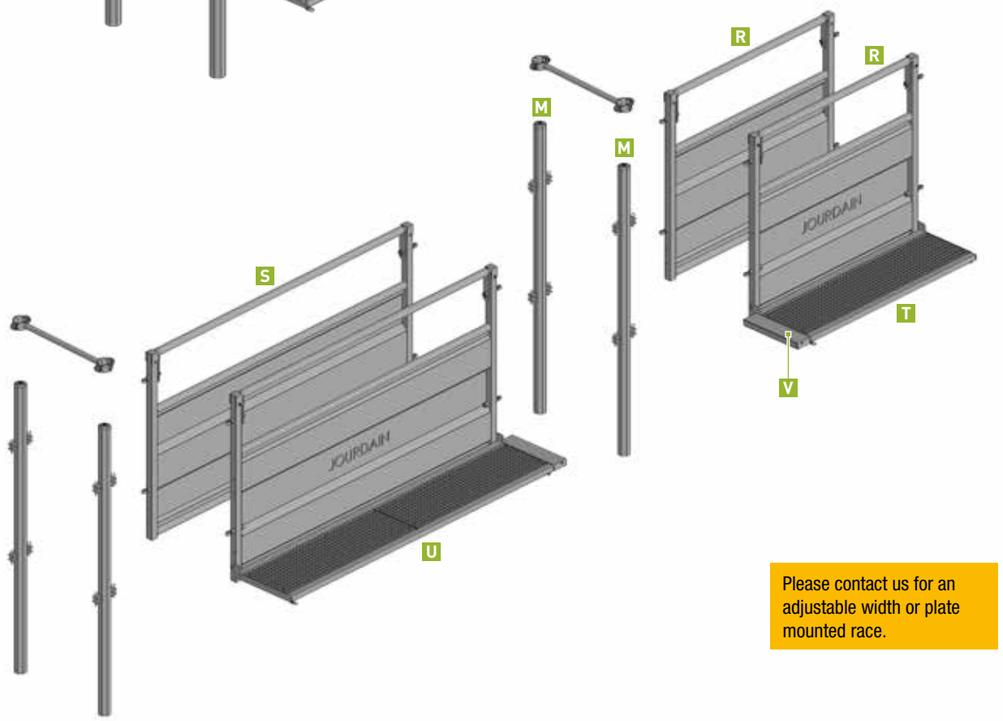

Please contact us for an adjustable width or plate mounted race.

FIXED RACE

The sheeted race enables animals to be handled safely. The stockman has easy access to the animals thanks to the platform and the folding bar.

ONLY USE HANDLING AREA POSTS, STANDARD WELDED OR BARE POSTS WITH BRACKETS ARE NOT SUITABLE. IF THE RACE IS BEING CREATED WITHOUT A CHICANE PLEASE BUY 2 EXTRA POSTS.

RACE FOR ATTACHING TO A CHICANE

CO3120 Cattle Race Complete 5 m (attached to chicane posts) — 525 kg

COMPRISING:
- 2 Sheeted barriers fixed with folding bar L.2 m R
- 2 Sheeted barrier fixed with folding bar L.3 m S
- 1 Step folding for sheeted fixed 2 m barrier T + extension
- 1 Step folding for sheeted fixed 3 m barrier U + extension
- 4 Cattle chicane/race OCTAGONAL posts 2 way Ø 102 mm for setting in L.2.43 m M

CO3121 Cattle Race Complete 6 m (attached to chicane posts) — 581 kg

COMPRISING:
- 4 Sheeted barrier fixed with folding bar L.3 m S
- 2 Step folding for sheeted fixed 3 m barrier U
- 4 Cattle chicane/race OCTAGONAL posts 2 way Ø 102 mm for setting in L.2.43 m M

PARTS SUPPLIED INDIVIDUALLY

Reference			
R	CO3124	Sheeted barrier fixed R with folding bar L.2 m	65 kg
S	CO3125	Sheeted barrier fixed S with folding bar L.3 m	93 kg
T	CO3127	Step folding for sheeted barrier fixed L.2 m	49 kg
U	CO3128	Step folding for sheeted barrier fixed L.3 m	70 kg
V	CO3129	Step extension	5 kg
M	CO9912	Post M cattle chicane/race OCTAGONAL 2 way L.2.43 m	23 kg

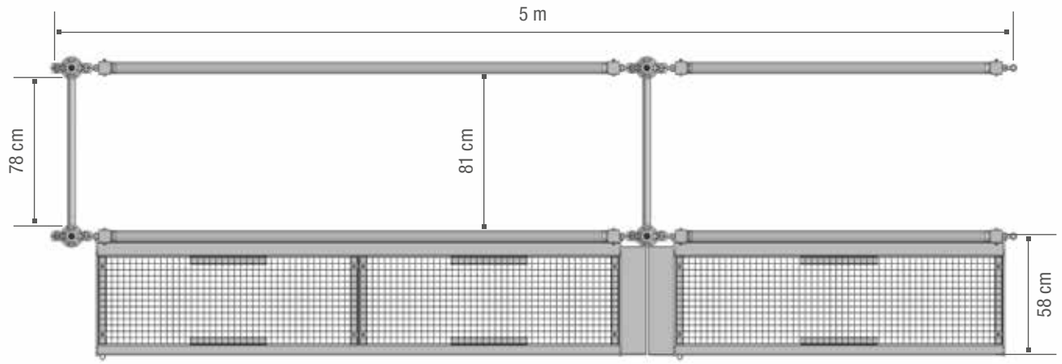

In the event of 3 consecutive platforms being fitted, please order an extra extension (ref. CO3129).

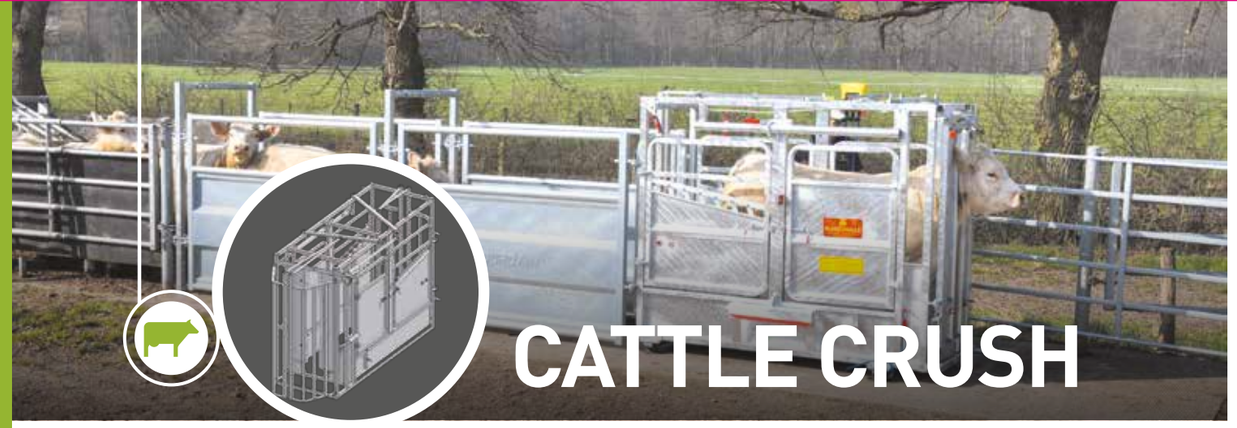

CATTLE CRUSH

FIXED
CATTLE CRUSH

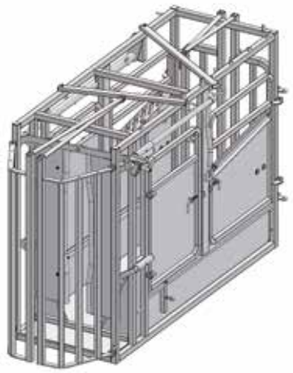

CO2500
Galvanized

ADJUSTABLE
CATTLE CRUSH

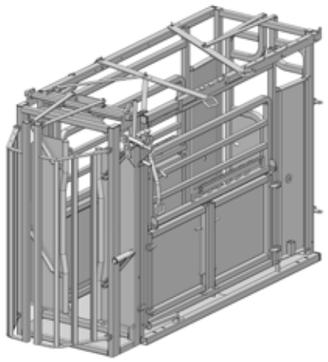

CO2800
Galvanized

SECTIONAL DOOR

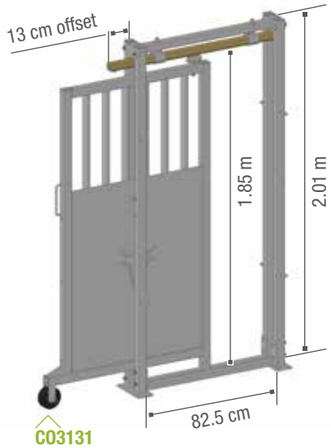

CO3131

DOOR PM93

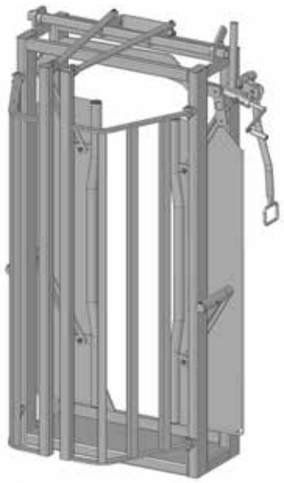

CO2693
Front view

SORTING DOOR

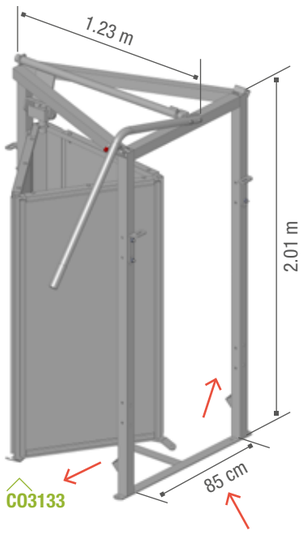

CO3133

SAFETY SHUTTER

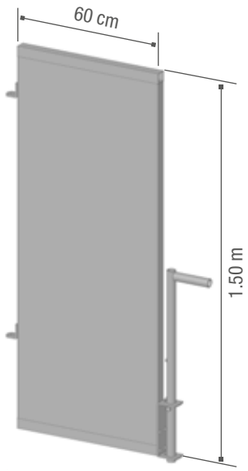

CO3135

FIXED
CATTLE CRUSH

CRUSH WITH STEEL SHEETED SIDES, OPENING SIDE DOORS, "3 POINT HITCH" - WINCH WITH GIRTH SUPPORT STRAPS, WINCH FOR RAISING BACK FEET AND FRONT LEG SUPPORT STAND. VOLUME: 2.40 X 0.82 X 1.70 M. HEADLOCK door with central lever opening and closing, barred two part front stop gate; two side doors, anti-reversing rack, two part backdoor. Integral nonslip chequer plate floor.

CO2500	Cattle crush P.M. SUPER GALVANIZED (lever right)	600 kg

ADJUSTABLE
CATTLE CRUSH

GALVANISED CATTLE CRUSH WITH UNIVERSAL REVERSIBLE CRUSH DOOR PM93 ; THE CONTROLS FOR THE BARRED FRONT DOOR AND THE SHUTTERS CAN BE MOUNTED TO THE LEFT OR THE RIGHT. ADJUSTABLE SIDE PANELS GIVING FOR INTERNAL WIDTHS FROM 40 TO 82 CM.
4 side doors (2 either side), folding top panels and twin panel rear insemination door. Rubber floor mat.
Hoof trimming equipment not included. Dimensions 2.70 m x 0.82 m x 1.70m.

CO2800	Adjustable cattle crush PM2800 GALVANIZED	750 kg

ELECTRONIC
WEIGHING EQUIPMENT

SET OF WEIGHING BARS WITH TRU TEST CONTROL BOX (MAX WEIGHING CAPACITY 2000 KG).
Two sensors linked to a display PM500: weight display, display lock, automatic zeroing. For installation on a hard flat surface. The feet absorb violent lateral shocks. Integrated temperature compensation. Sealed electronic bars. Overload protection of 150%.

CO1010	Electronic weighing equipment (load bar)	25 kg

CRUSH DOOR

CRUSH DOOR TYPE PM93.
Centre closing headlock door. Barred two-part front stop gate, left or right opening depending on the installation.
Single lever controlled tightening. Internal dimensions 1.70 x 0.82 m.

CO2693	Door cattle crush PM93 GALVANIZED	268 kg

SLIDING SECTIONAL DOOR

The skid mounted sliding sectional door allows animals to be blocked in order for the work to be carried out safely particularly at the rear of the crush.

CO3131	Sliding sectional door on rail	73 kg

SORTING DOOR

THE STOP AND TWO DIRECTIONAL SORTING DOOR ENABLES ANIMALS TO BE SORTED EASILY DUE TO ITS LARGE LEVER.
The mobile panel is filled with a synthetic material. The control lever can be mounted on the left or on the right-hand side.

CO3133	Sorting door	98 kg

SAFETY SHUTTER

The safety shutter can be positioned after the sectional door or the sorting door in order to ease interventions at the rear of the animal.

CO3135	Safety equipment for sliding sectional and sorting door (unit)	21 kg

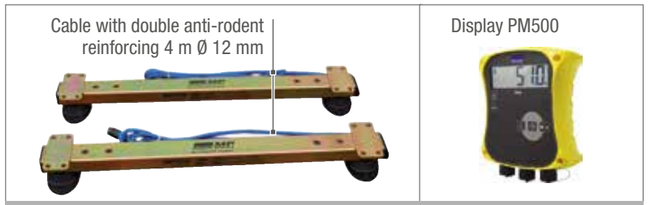

SET OF WEIGHING BARS WITH A CONTROL BOX PM500

EXAMPLE OF A HANDLING SYSTEM
WITH A HOLDING PEN

PANEL
FOR HANDLING AREAS

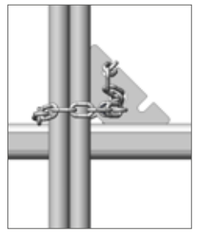

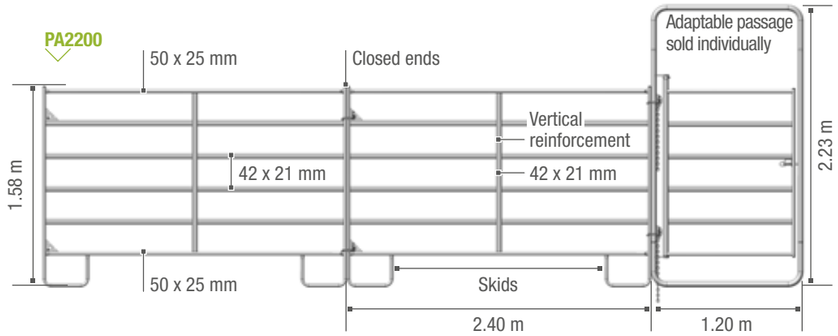

ADJUSTABLE
PANEL ARC

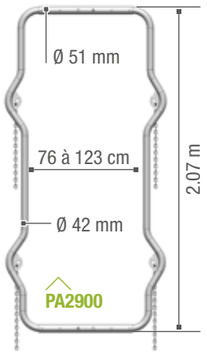

TRANSPANEL

TRANSPANEL ONLY

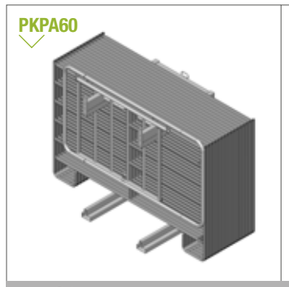

TRANSPANEL FULLY LADEN REAR VIEW

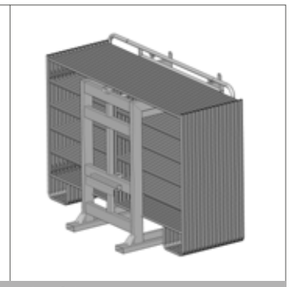

TRANSPANEL FULLY LADEN FRONT VIEW

PEN PANEL 3 X 3

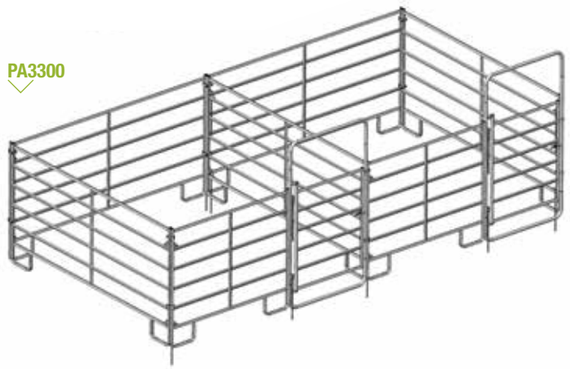

PA3323
EXTENSION PEN PANEL

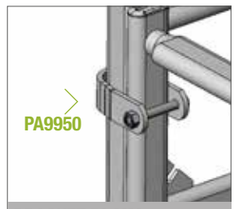

BRACKET 50 MM

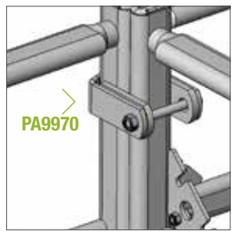

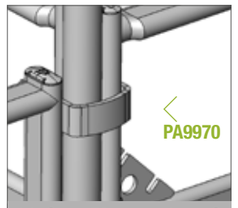

BRACKET 70 MM + PLATES

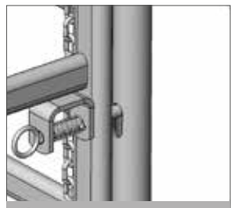

BOLT

LIGHT WEIGHT HANDLING AREA
PANEL

LIGHTWEIGHT CATTLE AND HORSE HANDLING AREA PANEL FOR QUICK AND EASY MOBILE HANDLING AREA ASSEMBLY.
Assembly using chains eases panel attachment and ensures their stability. Their skids enable them to be moved easily. Made from special oval tube, external tubes 50 x 25 mm, internal tubes 42 x 21 mm. Distance between tubes 21 cm. Height: 1.57 m. Dimensions for a lunging arena: 16 panels of 2.40 m = Ø 12 m, 16 panels of 3 m = Ø 15m and 16 panels of 3.60 m = Ø 18 m.
FOR ROAD TRANSPORT, ALWAYS COMPLY WITH THE HIGHWAY CODE.

PANEL

PA2400	Panel 2.40 m - with 1 vertical reinforcement	(Pack x 16)	30 kg
PA3000	Panel 3 m - with 1 vertical reinforcement	(Pack x 16)	35 kg
PA3600	Panel 3.60 m - with 2 vertical reinforcements	(Pack x 16)	41 kg

GATE
FOR PANEL

Length 1.20 m, height: 2.25 m. Can be adapted to suit 3 panel models. Supplied individually.

PA2200	Gate for panel - N.B. 1 panel 2.40 m + 1 gate = 3.60 m	30 kg
PA2900	Panel arc adjustable	19 kg

TRANSPANEL

For storing and transporting panels. Capacity 16 panels and 1 gate. Transport system: either on three point linkage or on pallet forks. Delivered with a ratchet and strap.

PA0060	Transpanel only	131 kg
TRANSPANEL DELIVERED LOADED FOR AN ECONOMIC PRICE		
PKPA60	Transpanel + 16 panels 2.40 m + 1 gate	641 kg

PEN PANEL 3 X 3

Lightweight, easily moved, suitable for indoor or outdoor use, quick assembly and disassembly, rigid, assembled using brackets.

PA3300	Pen panel 3 x 3 m with passage - Comprising 3 panels 3 m + front	168 kg
PA3323	Extension for pen panel 3 x 3 m- Comprising 2 panels 3 m + front	130 kg
PA1800	Panel 1.80 m (short)	27 kg
PA3318	Pen panel front L. 3 m - Comprising 1 panel 1.80 m + 1 front	60 kg
PA9950	Pair of brackets for holding panel angles ø 50 mm	0.85 kg
PA9970	Pair of brackets for holding 3 panels ø 70 mm	2.50 kg
SAC330	Sack panel pen 3 x 3 m	4.20 kg
SAC332	Sack for panel pen extension	3.50 kg

CALF SAFETY®
HEADLOCK

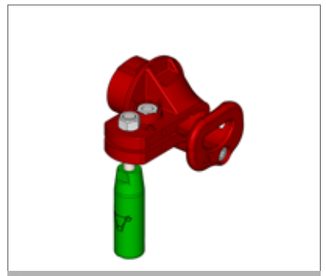

CONTROL HANDLE

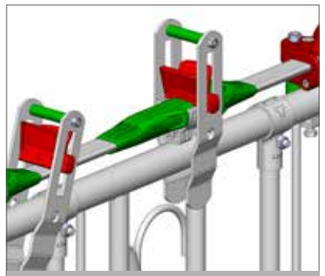

SUPPORT HOUSING WITH INDIVIDUAL CENTRAL LOCKING PER PEN

4 ADJUSTABLE INSERTS FOR CALVES

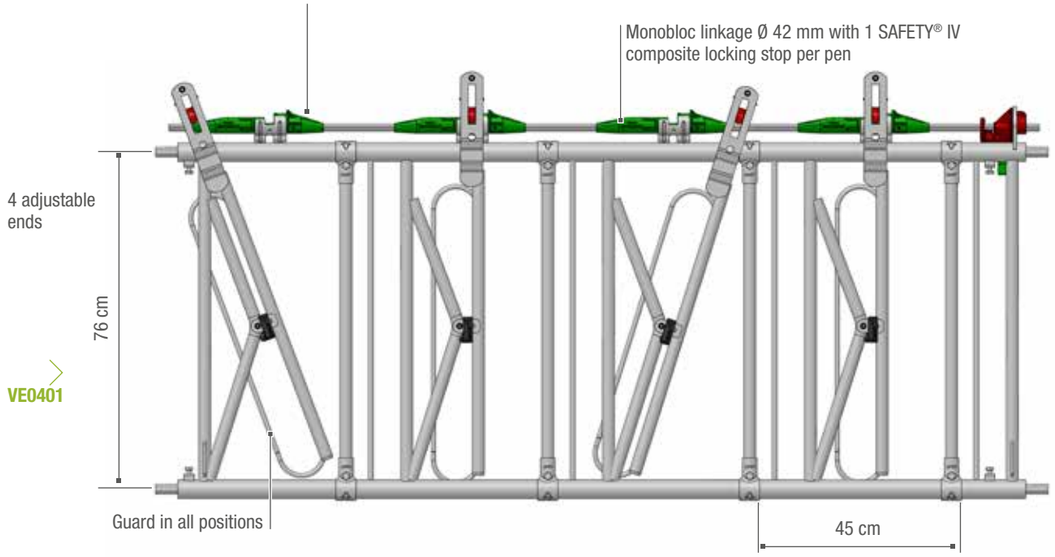

RETURN TO ZERO (RAZ)

REINFORCEMENT FOR SETTING IN 42/42

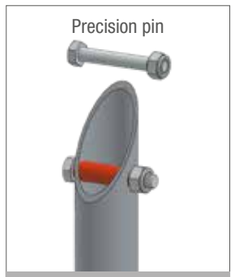

STAINLESS STEEL ANTIWEAR BUSH FOR PIVOT

! OUR PANELS OF 4 - 5 - 6 - 8 AND 10 PLACES WITH 3 M PARTITIONS, COMPLY WITH EU STANDARDS:
1,5 m² per calf minimum. It is still advisable to use 4 m partitions with the 8 and 10 place panels..

IMPERATIVE
It is imperative that reinforcements are set in for panels of 4 and 5 metres.

HEADLOCK

CALF SAFETY®

FOR CALVES OF UP TO 6 MONTHS OLD

Calf SAFETY® panels with adjustable yokes, 4 adjustable ends and, **AS AN OPTION,** a folding bucket holder - 45 cm per calf space.

VE0401	Headlock calf SAFETY® IV	4 places	2.12 m	Post centres	(Pack x 6)	45 kg
VE0402	Headlock calf SAFETY® IV	5 places	2.57 m		(Pack x 6)	55 kg
VE0403	Headlock calf SAFETY® IV	6 places	3.02 m		(Pack x 6)	66 kg
VE0404	Headlock calf SAFETY® IV	8 places	4.02 m		(Pack x 6)	88 kg
VE0405	Headlock calf SAFETY® IV	10 places	5.02 m		(Pack x 6)	120 kg

OPTION

BUCKET HOLDER Ø 370 MM

VE1404	Bucket Holder	4 places (bucket Ø 37 cm)	8.5 kg
VE1405	Bucket Holder	5 places (bucket Ø 37 cm)	10.5 kg
VE1406	Bucket Holder	6 places (bucketØ 37 cm)	12.5 kg
VE1407	Bucket Holder	8 places (bucket Ø 37 cm)	17 kg
VE1408	Bucket Holder	10 places (bucket Ø 37 cm)	21 kg

OPTION

STEEL TROUGH

Optional, trough suitable for the bucket holder, made from galvanised steel.

VE2507	Metal trough for HEADLOCK calf - 4 places	17 kg
VE2508	Metal trough for HEADLOCK calf - 5 places	21 kg
VE2509	Metal trough for HEADLOCK calf - 6 places	25 kg
VE2510	Metal trough for HEADLOCK calf - 8 places (2 troughs of 4p.)	34 kg
VE2511	Metal trough for HEADLOCK calf - 10 places (2 troughs of 5p.)	50 kg

CALF HEADLOCK INSTALLATION

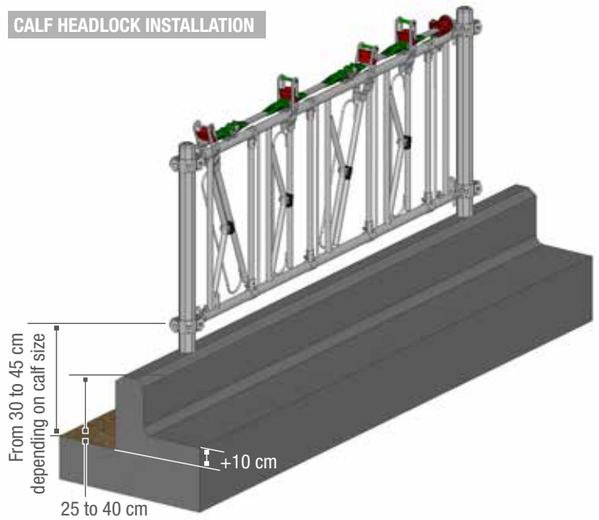

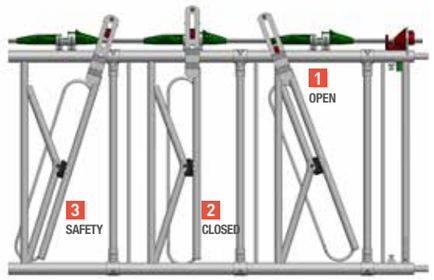

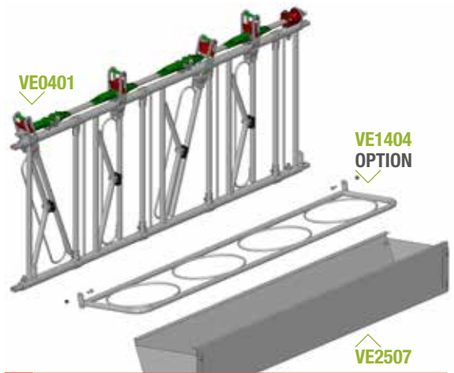

! THE OPTIONAL STEEL BUCKET HOLDER
is made for buckets with a diameter of Ø 37 cm.

REVERSE TROUGH

MODULE CALF

OPTION

REVERSE TROUGH

YouTube ENTER JOURDAIN

STEEL FRAME WITH A HDPE calf trough molded to give a bucket shape Ø 28.5 cm Easily turned for cleaning.

VE2404	Reverse trough for buckets	4 places	17.5 kg
VE2405	Reverse trough for buckets	5 places	21 kg
VE2406	Reverse trough for buckets	6 places	25 kg
VE2407	Reverse trough for buckets	8 places	35 kg
VE2408	Reverse trough for buckets	10 places	42 kg

CALF HEADLOCK WITH A REVERSE TROUGH AT THE BOTTOM

CALF HEADLOCK WITH THE REVERSE TROUGH TIPPED

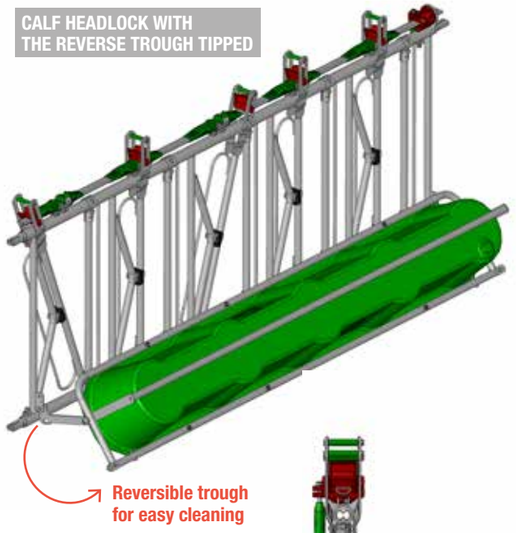

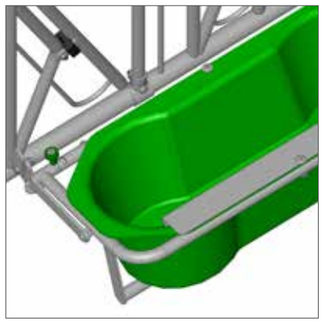

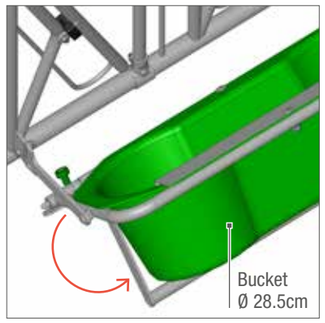

MODULE

CALF

To use with support frame Ø 42 mm.

M00300	Standard calf SAFETY® module place up to 450 mm/place	7.5 kg

END BAR

Allow an end with a linkage guide per module.

M00320	End bar module calf	1.9 kg

SUPPLEMENTARY CALF BAR

Allow an adjustable supplementary bar per 150 mm section over 450 mm per place.

M00310	Bar supplementary for calves	1.6 kg

SUPPORT FRAME Ø 42 MM

M00336	Frame 2 m Ø 42 mm	10 kg
M00337	Frame 3 m Ø 42 mm	15 kg
M00338	Frame 4 m Ø 42 mm (with intermediate reinforcement)	20 kg
M00339	Frame 5 m Ø 42 mm (with intermediate reinforcement)	25 kg
VE2790	Calf end Ø 34 mm (unit)	0.4 kg

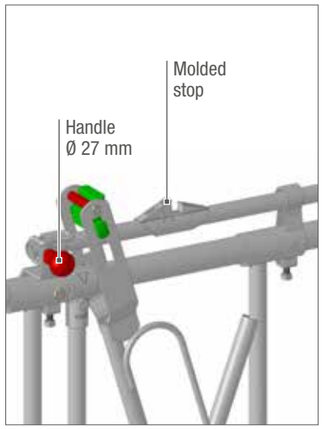

SUPPORT FRAME Ø 42 mm
(2 tubes Ø 42 mm,
1 control linkage Ø 27 mm,
1 handle Ø 27 mm,
4 calf ends)

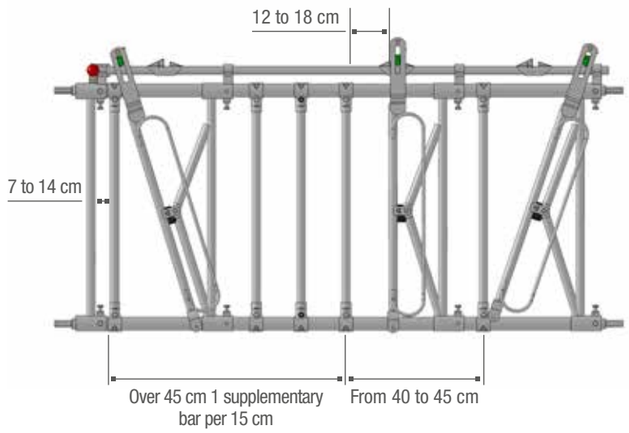

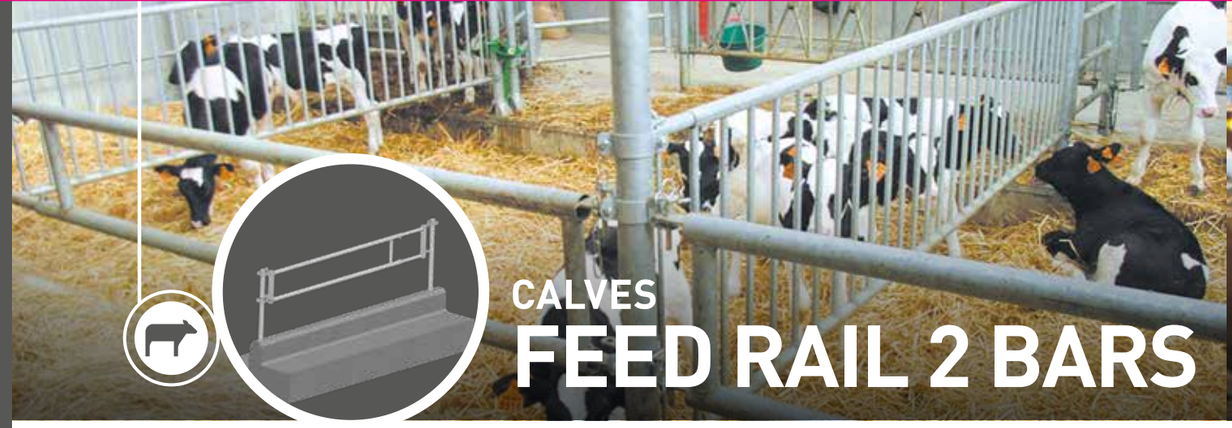

CALVES
FEED RAIL 2 BARS

DIAGONAL
CALF

CALF FEED RAIL 2 BARS
FOR CALVES OF UP TO 6 MONTHS

The back section is made using Ø 60 mm tube and the adjustable front section Ø 49 mm.

LO3195	2 bar calves feed rail 2 / 3 m (1 spacer)	26 kg
LO3196	2 bar calves feed rail 3 / 4 m (1 spacer)	34 kg
LO3197	2 bar calves feed rail 4 / 5 m (2 spacers)	42 kg
LO3198	2 bar calves feed rail 5 / 6 m (2 spacers)	50 kg

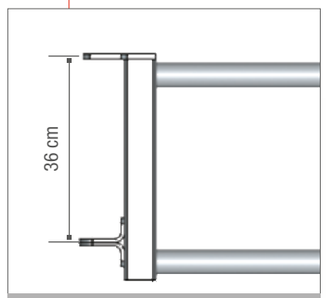

END DETAILS

! THE SIZES ARE GIVEN AS AN INDICATION.
Please adapt them to suit the size of your stock.

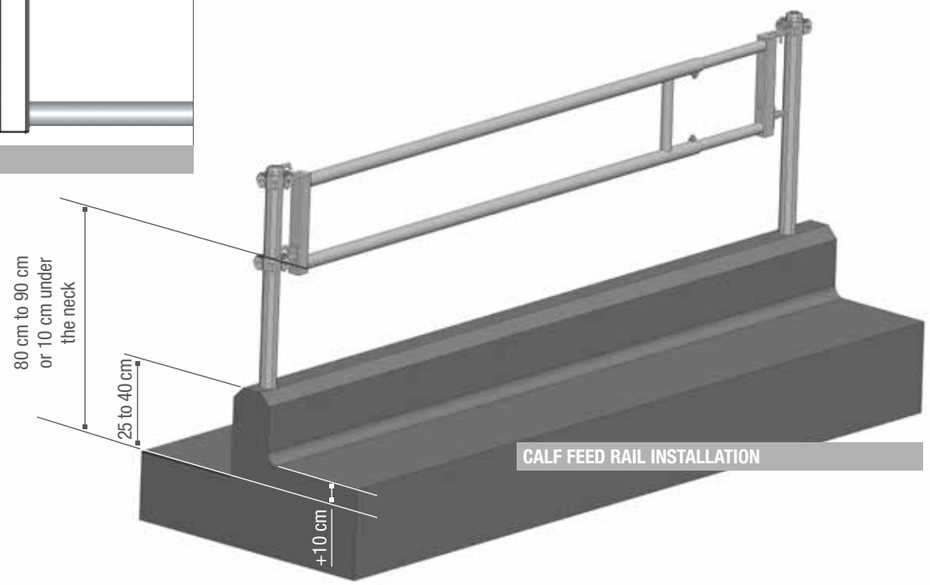

CALF FEED RAIL INSTALLATION

DIAGONAL CALF
FOR CALVES OF UP TO 6 MONTHS OLD

Diagonal panel limiting wastage at the trough. The 4 and 5 m panels are delivered with a reinforcement to be set in.

VE2601	Panel diagonal calves 5P. / 2.12m	22 kg
VE2602	Panel diagonal calves 7P. / 2.57 m	27 kg
VE2603	Panel diagonal calves 9P. / 3.02 m	32 kg
VE2604	Panel diagonal calves 12P. / 4.02 m	40 kg
VE2605	Panel diagonal calves 16P. / 5.02 m	55 kg

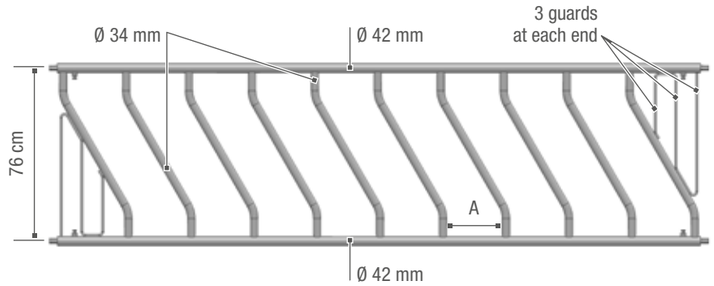

DIAGONAL CALVES	A
5 places 2.12 m	27 cm
7 places 2.57 m	25 cm
9 places 3.02 m	24 cm
12 places 4.02 m	25 cm
16 places 5.02 m	24 cm

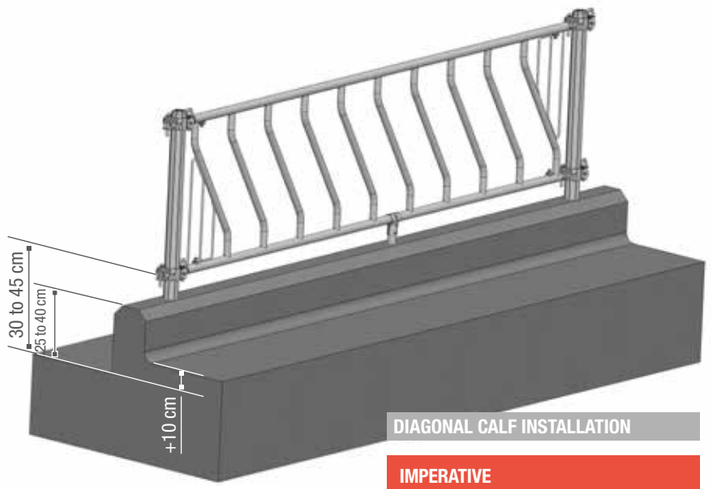

DIAGONAL CALF INSTALLATION

IMPERATIVE
It is imperative that reinforcements are set in for panels of 4 and 5 metres.

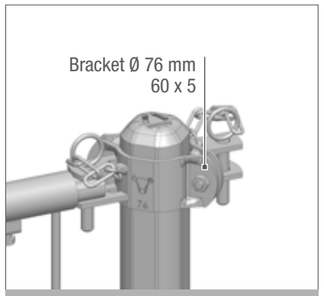

4 CALF ENDS

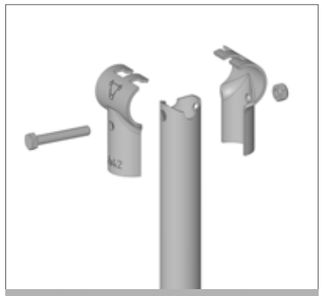

REINFORCEMENT FOR SETTING IN

SEPARATION

CALF

DEMOUNTABLE AND OPENS IN BOTH DIRECTIONS. It is possible to shorten it for installation. With 4 adjustable ends. Overall size = 800 mm.

VE2770	Separation calves 3 m	Centre/Centre/post	(Pack x 6)	30 kg
VE2772	Separation calves 4 m		(Pack x 6)	44 kg
VE2774	Separation calves 5 m		(Pack x 6)	57 kg

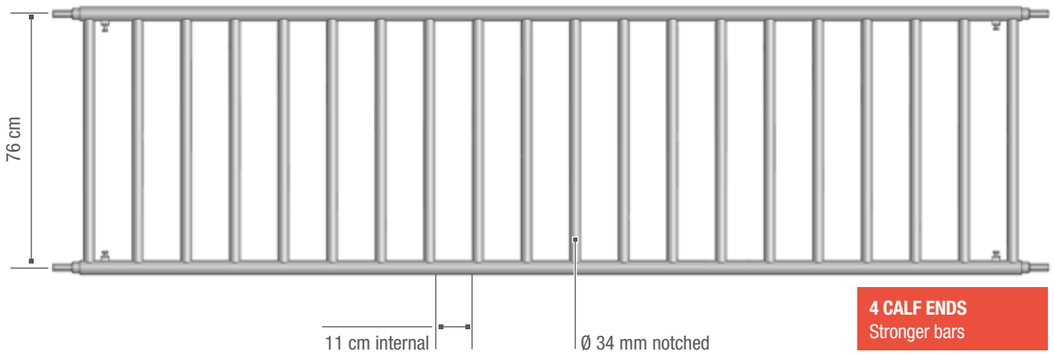

4 CALF ENDS
Stronger bars

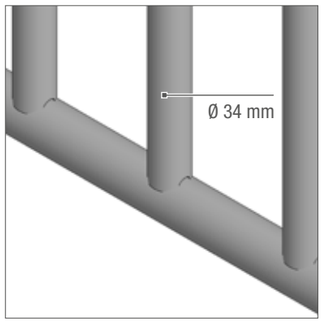

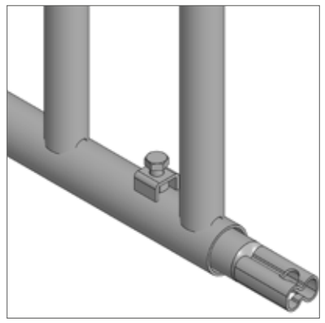

GATE

CALF

VERTICALLY BARRED CALF GATE L. 1.30 M CENTRE / POST CENTRE, IT CAN BE SHORTENED BY CUTTING THE FRONT SECTION.
Fitted with an AUTOLOCK bolt, it provides easy entry into calf pens. After cutting the front part can be adapted to fit a partition to enable it to open.

VE2763	Small gate for calf H. 80 cm L. 1.30 m	21 kg
VE2760	Front small gate for calf H. 80 cm	13 kg

VE2763

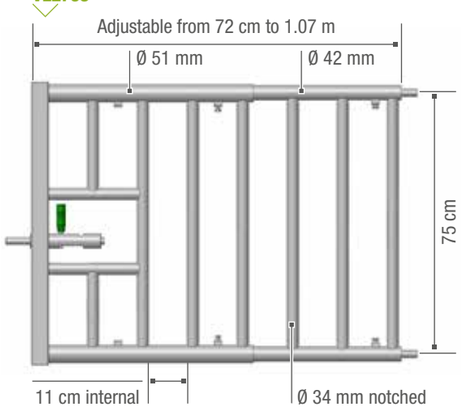

VE2760

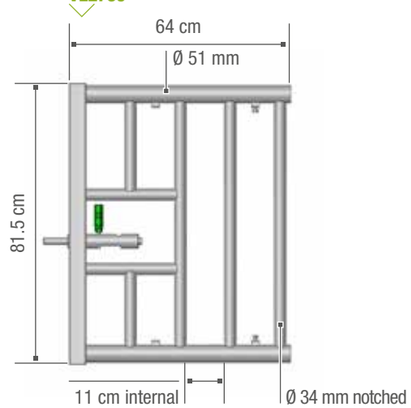

FIELD
GATE WITH CENTRAL BOLT

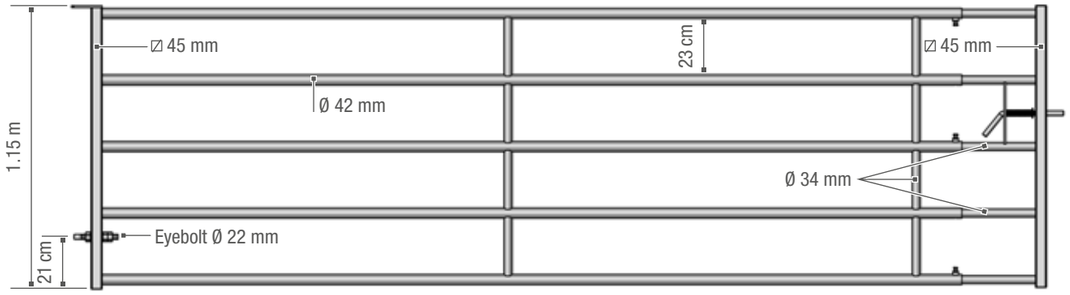

FIELD
STANDARD GATE

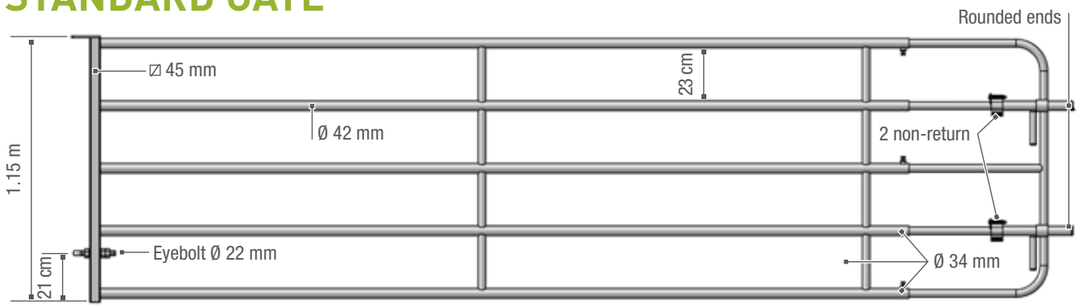

FIELD
PANEL

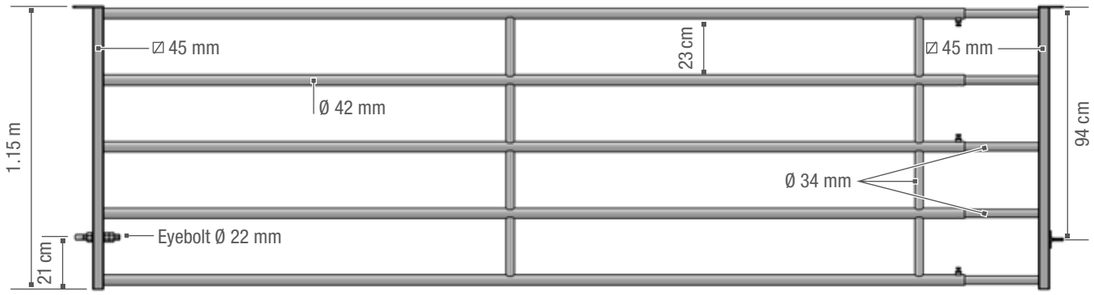

FIELD
BARRIER

Made from Ø 42 mm tube. Telescopic section Ø 34 mm. Spacers Ø 34 mm machined to provide a jawed end, 3 tightening points, reinforced eyebolts Ø 22 mm with 3 nuts passing through a steel bush. Raised easily by turning.

FIELD GATE WITH CENTRAL BOLT		
BH4304	Field gate with central bolt 2/3 m	42 kg
BH4305	Field gate with central bolt 3/4 m	55 kg
BH4306	Field gate with central bolt 4/5 m	70 kg
BH4307	Field gate with central bolt 5/6 m	82 kg

FIELD GATE STANDARD		
BH2300	Field gate STANDARD 2/3 m	42 kg
BH4300	Field gate STANDARD 3/4 m	53 kg
BH4301	Field gate STANDARD 4/5 m	68 kg
BH4302	Field gate STANDARD 5/6 m	80 kg

FIELD PANEL		
Ideally suited for calf fattening pens.		
BH4309	Field panel 2/3 m	42 kg
BH4310	Field panel 3/4 m	53 kg
BH4311	Field panel 4/5 m	68 kg
BH4312	Field panel 5/6 m	80 kg

FIELD GATE BACK

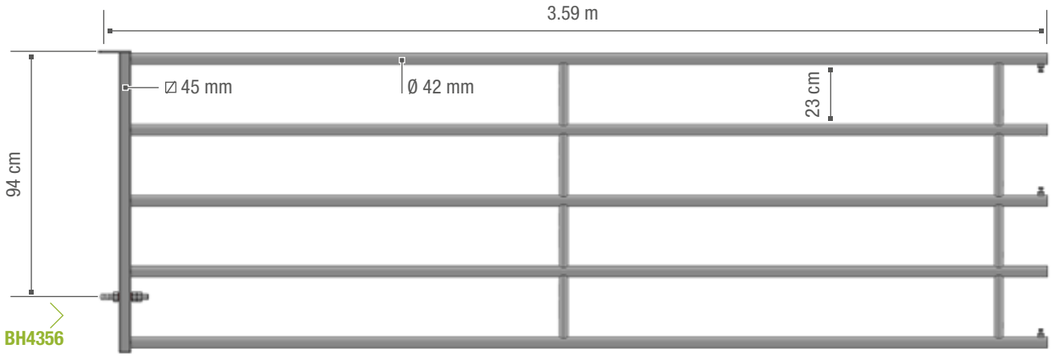

BH4356

FIELD

GATE

FIELD GATE BACK			
BH4354	Field back 2/3 m (1,59 m axis/pin)	(Pack x 14)	22 kg
BH4355	Field back 3/4 m (2,59 m axis/pin)	(Pack x 14)	35 kg
BH4356	Field back 4/5 m (3,59 m axis/pin)	(Pack x 14)	50 kg
BH4357	Field back 5/6 m (4,59 m axis/pin)	(Pack x 14)	62 kg
FIELD GATE FRONT			
BH4353	Field front with central bolt (1.52 m)	(Pack x 14)	20 kg
BH4350	Field gate front (1.53 m)	(Pack x 14)	18 kg
BH4351	Field panel front (1.56 m)	(Pack x 14)	18 kg
BH4352	Field panel front with recess drinker Ideally suited for calf fattening pens (1.56 m)		18 kg

FIELD GATE FRONT

WITH CENTRAL BOLT

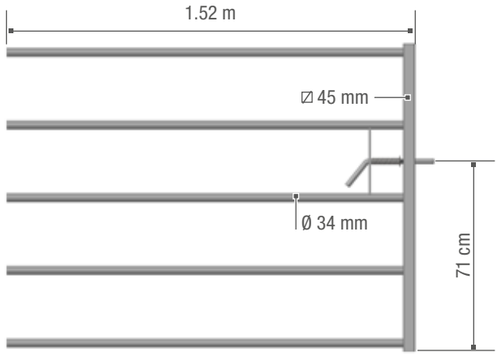

BH4353

FIELD GATE FRONT

STANDARD

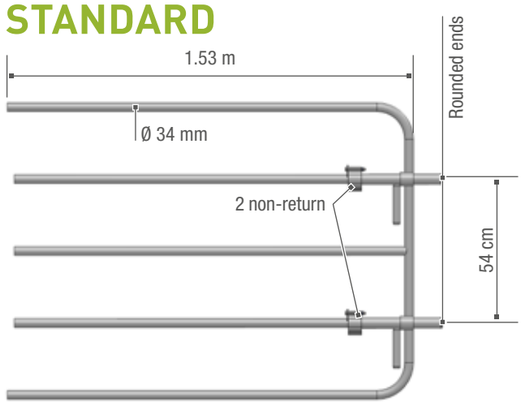

BH4350

FIELD

PANEL FRONT

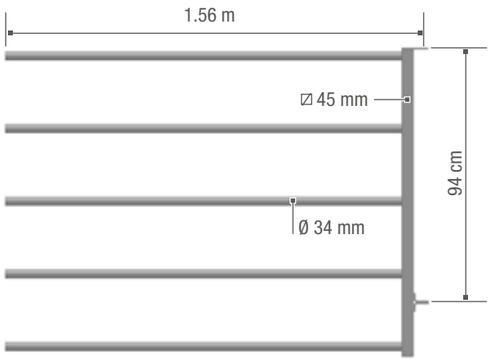

BH4351

FIELD FRONT

WITH RECESS

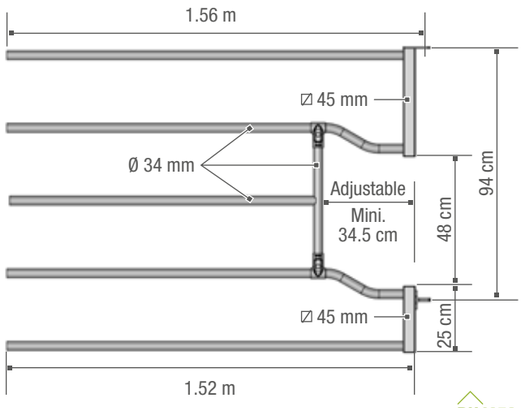

BH4352

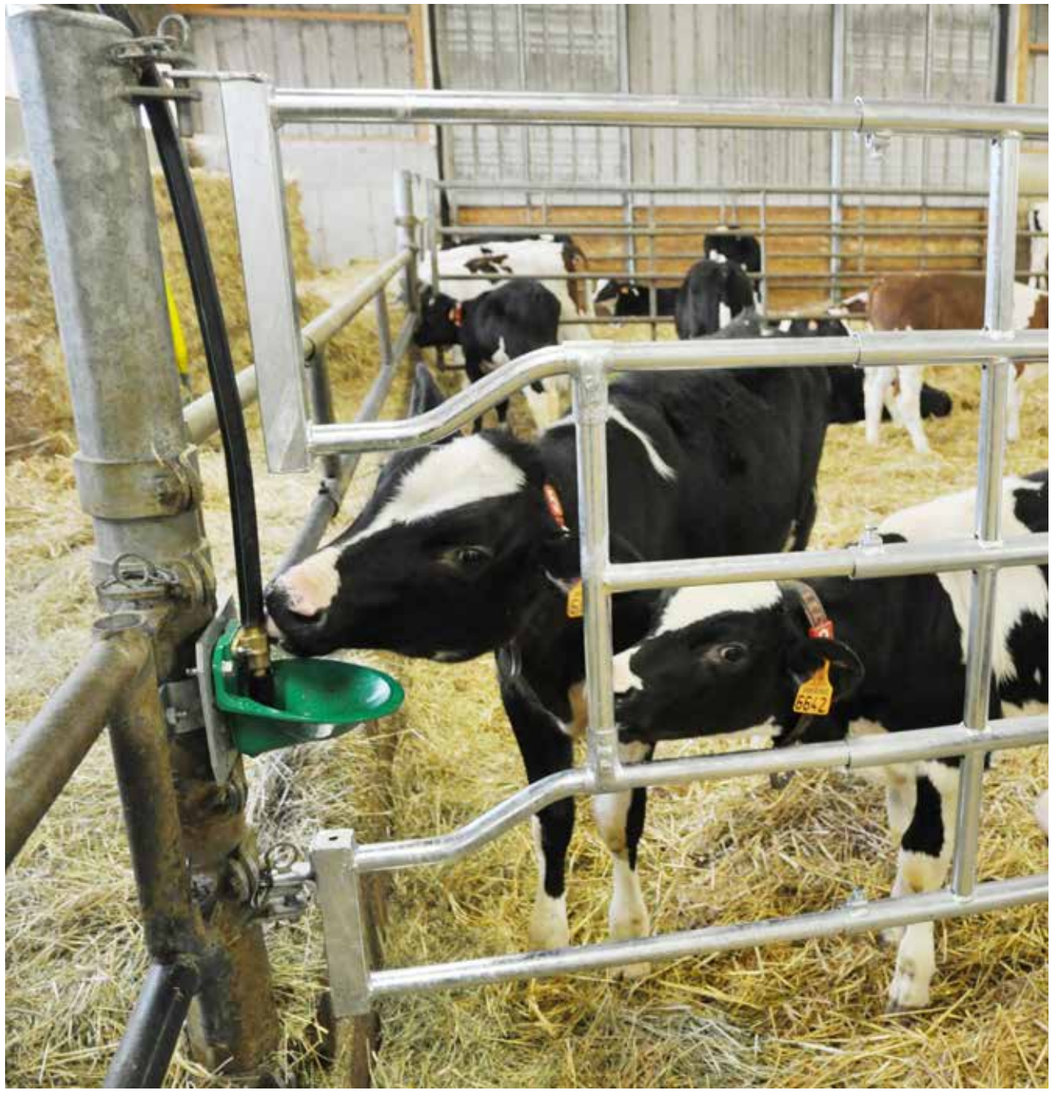

GATE

BP0703

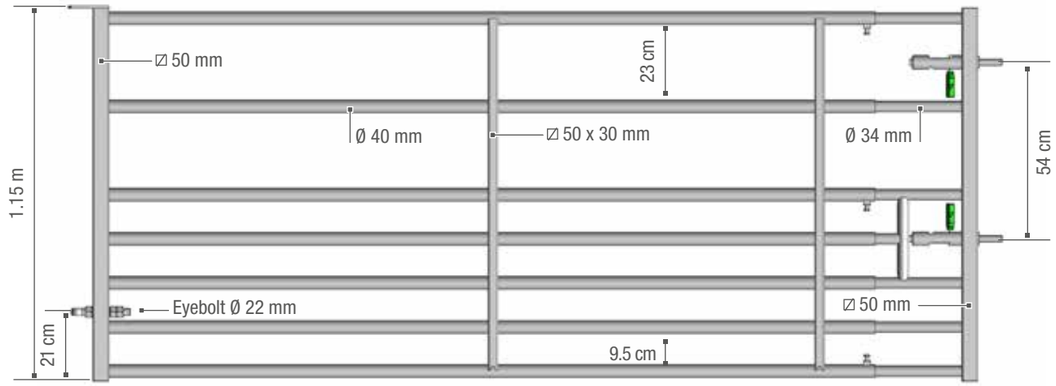

PANEL

BP0713

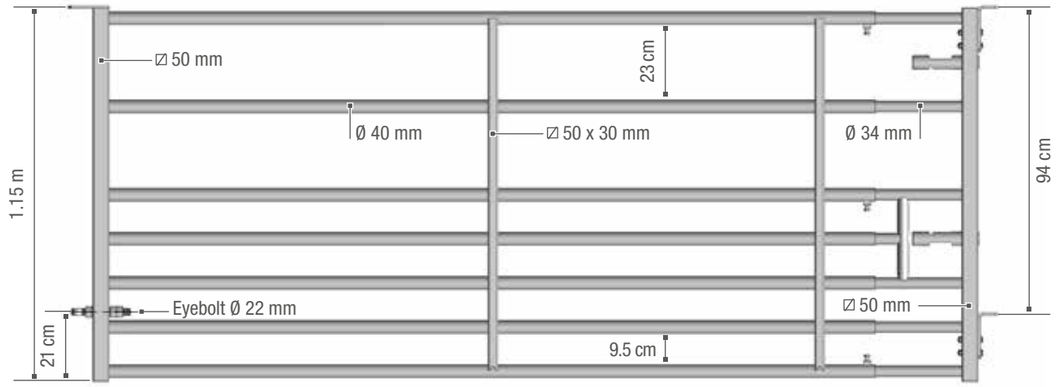

SEVEN BAR GATES

SMALL ANIMALS

MADE FROM TUBE Ø 40 MM, THICKNESS 1.5 MM, THE ROUND TUBES GO THROUGH THE SQUARE TUBE SPACER 50 X 30 MM FOR ADDED STRENGTH. The front section in ø 34 mm tube is a universal front for panels or gates with two autolock bolts depending on the sack of nuts and bolts. Being adjustable this barrier is extremely practical when used in a building as part of a pen for calves sheep or goats. It is also suitable for yard and field entrances.

GATE

BP0701	Gate 7 bars small animals L.1/2 m	(Pack x 7)	36 kg
BP0702	Gate 7 bars small animals L.2/3 m	(Pack x 14)	46 kg
BP0703	Gate 7 bars small animals L.3/4 m	(Pack x 14)	57 kg
BP0704	Gate 7 bars small animals L.4/5 m	(Pack x 14)	69 kg
BP0705	Gate 7 bars small animals L.5/6 m	(Pack x 14)	79 kg

PANEL

BP0711	Panel 7 bars small animals L.1/2 m	(Pack x 7)	35 kg
BP0712	Panel 7 bars small animals L.2/3 m	(Pack x 14)	45 kg
BP0713	Panel 7 bars small animals L.3/4 m	(Pack x 14)	56 kg
BP0714	Panel 7 bars small animals L.4/5 m	(Pack x 14)	68 kg
BP0715	Panel 7 bars small animals L.5/6 m	(Pack x 14)	78 kg

BOLT AND NUTS SACK

SAC552	Sack for small animal panel front	1.2 kg
SAC182	Sack front EX 4 - EX 5 AUTOLOCK	2 kg

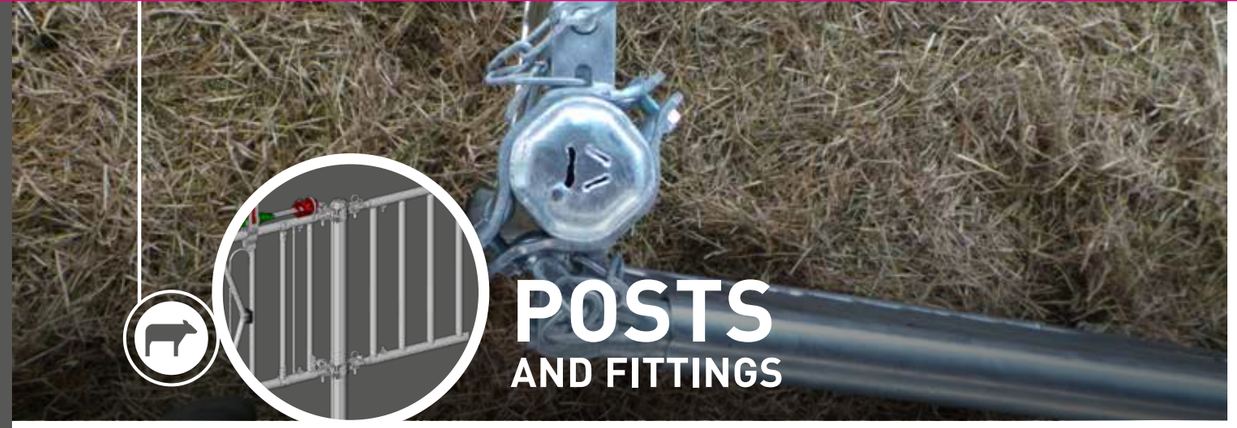

POSTS
AND FITTINGS

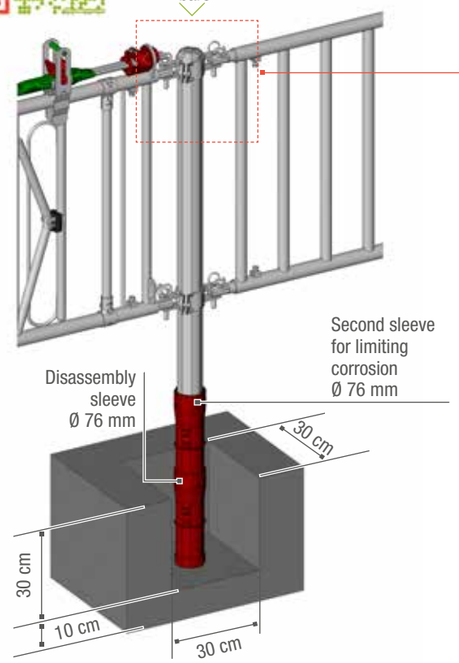

DETAILS FOR SETTING IN WITH AN OCTAGONAL SLEEVE

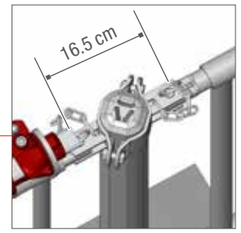

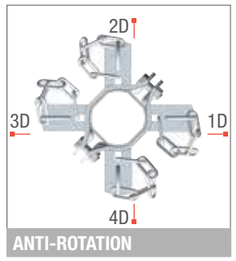

ANTI-ROTATION

ATTENTION!
Pay attention to the direction when setting in the post. The round part shows the direction

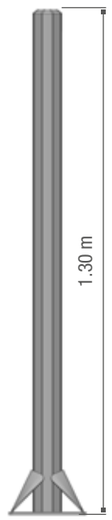

TR2590
Post
OCTAGONAL
on base bare

TR1611
Sleeve lid
Ø 76 mm

TR4176
Sleeve
OCTAGONAL
Ø 76 mm with
seal and base

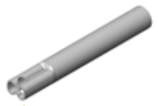

VE2790
Calf end

TR2595
Bracket
OCTAGONAL
1 way Ø 76 mm

TR2596
Bracket
OCTAGONAL
2 way Ø 76 mm

TR2597
Bracket
OCTAGONAL
3 way Ø 76 mm

TR2598
Bracket
OCTAGONAL
4 way Ø 76 mm

TR2599
Bracket
OCTAGONAL
2 way L form
Ø 76 mm

INSTALLATION ADVICE: Never set in an octagonal sleeve on its own. Always set it in with the post fitted, paying attention to the direction of the post and its brackets. The sleeve is marked1D, 2D, 3D, 4D in order for it to be set in facing the right way. Install the corrosion limiting sleeves before setting in the post.

OCTAGONAL POST Ø 76 MM

TR2580	Post OCTAGONAL bare Ø 76mm L. 1.65 m		8 kg
TR2590	Post OCTAGONAL on base bare Ø 76 mm L. 1.30 m		10 kg
TR4176	Sleeve OCTAGONAL red Ø 76 mm (for post OCTAGONAL Ø 76 mm)	(Pack x 30)	0.4 kg
TR1611	Sleeve lid Ø 76 mm		1 kg

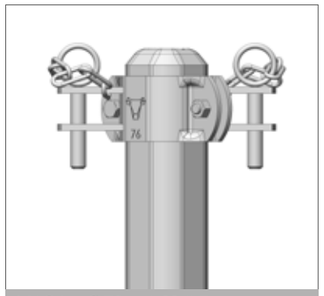

BRACKET Ø 76 MM 60 X 5

OCTAGONAL BRACKET Ø 76 MM 60 X 5
FOR OCTAGONAL POST Ø 76 MM

TR2595	Bracket OCTAGONAL 1 way Ø 76 mm		1.2 kg
TR2596	Bracket OCTAGONAL 2 way Ø 76 mm		1.6 kg
TR2597	Bracket OCTAGONAL 3 way Ø 76 mm		1.9 kg
TR2598	Bracket OCTAGONAL 4 way Ø 76 mm		2.2 kg
TR2599	Bracket OCTAGONAL 2 way L form Ø 76 mm		1.5 kg
VE2575	Bracket ROUND single bolt support standard Ø 76 mm		1 kg
VE3178	Bracket Ø 76 mm single bolt support SURLOCK		1.5 kg NEW
VE2579	Bracket ROUND double bolt support AUTOLOCK Ø 76 mm		2.4 kg

FITTINGS
BOLT BRACKET

FE3113	SURLOCK wall bracket (pair)		3 kg NEW

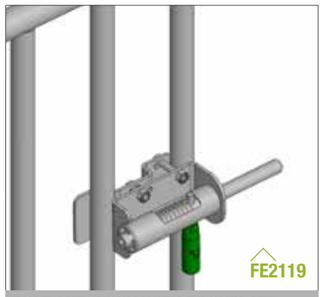

FE2119

BOLT AUTOLOCK WITH BACKPLATE

CALF ACCESSORIES

VE2790	Supplementary calf standard (unit)		0.4 kg
FE2119	Bolt AUTOLOCK with a back plate for mounting on calf or goat partition	(Pack x 10)	3 kg
PN9982	Adaptable bolt STANDARD		2.5 kg

OCTAGONAL SLEEVE
FOR OCTAGONAL POST Ø 76 MM

TR4176	Sleeve OCTAGONAL red Ø 76 mm	(Pack x 30)	0.4 kg
TR1611	Sleeve lid Ø 76 mm		1 kg

BITUMINOUS PAINT

TR0005	Bituminous paint container 5 litres (0.5l/m²)	5 kg

PATENTED NEW

FE3113
SURLOCK
wall bracket

VE3178
Bracket Ø 76 mm
single bolt support
SURLOCK

VE2579
Bracket round double bolt
support AUTOLOCK Ø 76 mm

VE2575
Bracket round single bolt
support standard ø 76 mm

PN9982
Adaptable bolt
STANDARD

IMPORTANT! In order to prevent corrosion steel in zinc due to prolonged contact with silage, slurry or muck, it is recommended that bituminous paint TR0005 should be applied before use, and periodically thereafter, in order to protect the equipment: post feet, barrier and cubicle bottoms, knee bars, brackets…

SURLOCK
Ø 76 MM AND FITTINGS

SURLOCK

THE SURLOCK ASSOCIATED WITH AN AUTOLOCK GATE FRONT GUARANTEES THAT THE GATE IS LOCKED WHEN IT IS SLAMMED SHUT. The SURLOCK works for left hand and right-hand opening thanks to the mobile SURLOCK stop. The SURLOCK is an essential item of safety equipment for our customers. The SURLOCK is patented.

VE3178	Bracket Ø 76 mm single bolt support SURLOCK	1.5 kg
FE3113	SURLOCK wall bracket **(pair)**	3 kg

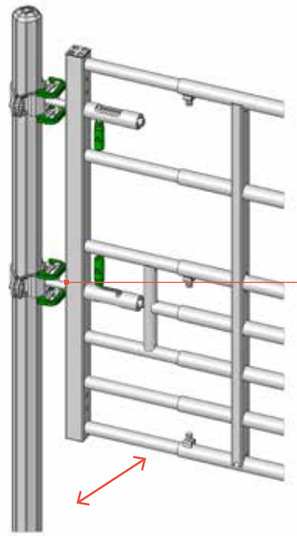

YouTube ENTER JOURDAIN

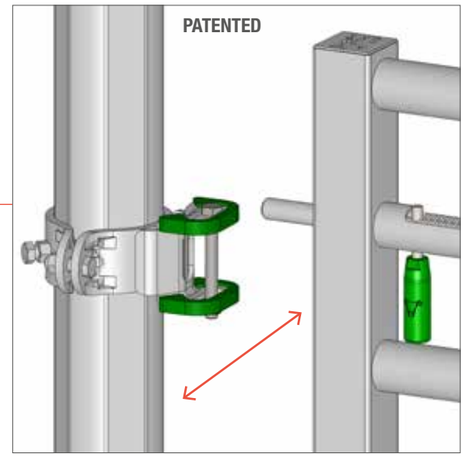

PATENTED

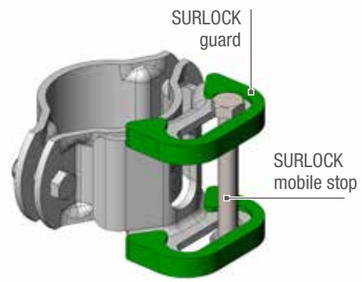

VE3178
Bracket Ø 76 mm single bolt support SURLOCK

PATENTED

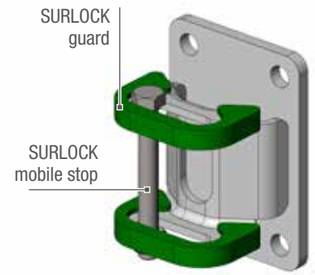

FE3113
SURLOCK wall bracket

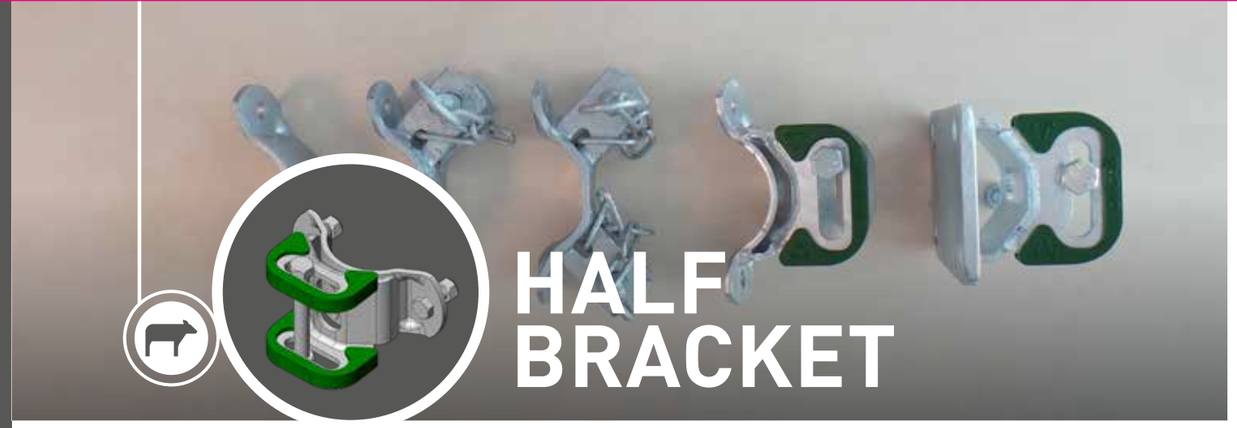

HALF BRACKET

OCTAGONAL HALF BRACKET
Ø 76 MM

TR2586

TR2587

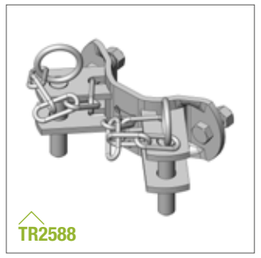
TR2588

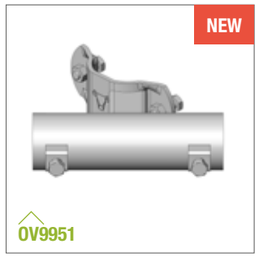
NEW
OV9951

HALF ROUND BRACKET
Ø 76 MM

VE2556

NEW
VE3078

VE2569

VE2558

FITTINGS
(UNIT)

NEW
FE3013

HALF BRACKET

THE BRACKETS ARE MADE FROM FLAT STEEL 60 X 5 MM THICKNESS WITH A REINFORCING HUMP. Delivered with SAC144.

HALF BRACKET
OCTAGONAL Ø 76 MM

TR2586	Half bracket OCTAGONAL bare Ø 76 mm	(Pack x 40)	0.3 kg	
TR2587	Half bracket OCTAGONAL 1 way Ø 76 mm	(Pack x 40)	0.8 kg	
TR2588	Half bracket OCTAGONAL 1 way Ø 76 mm	(Pack x 32)	1.3 kg	
OV9951	Half bracket OCTAGONAL Ø 76 mm - Support tube 49 mm		1.2 kg	NEW

HALF BRACKET
ROUND Ø 76 MM

VE2556	Half ROUND bracket bare Ø 76 mm	0.5 kg	
VE3078	Half ROUND bracket Ø 76 mm single bolt support SURLOCK	1.1 kg	NEW
VE2569	Half ROUND bracket Ø 76 mm double bolt support AUTOLOCK	1 kg	
VE2558	Half ROUND bracket Ø 76 mm single bolt support STANDARD	0.7 kg	

FITTINGS
(UNIT)

FE3013	SURLOCK wall bracket (unit)	(Pack x 20)	1.5 kg	NEW

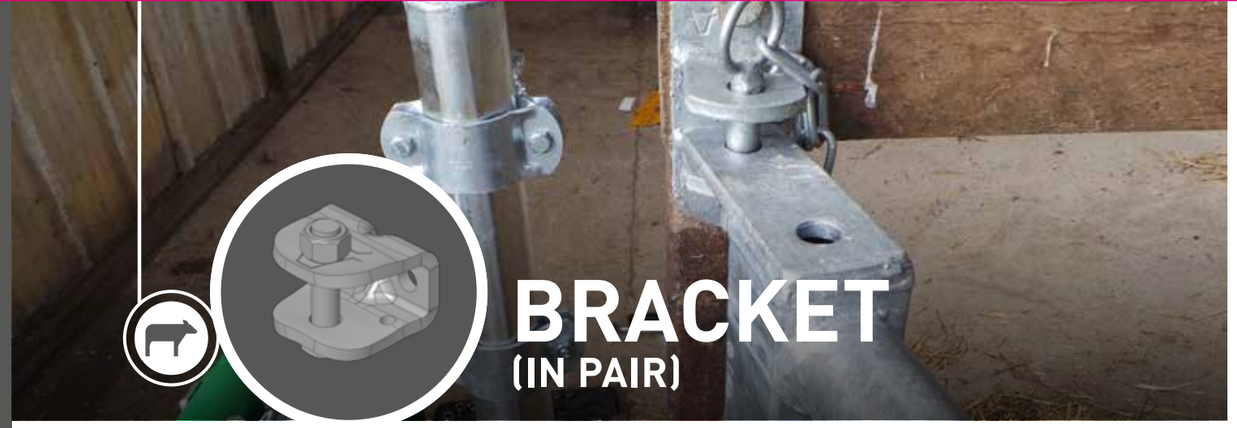

BRACKET
(IN PAIR)

MULTIFIX
BRACKET

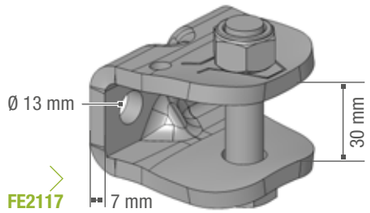

FE2117

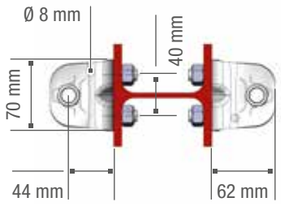

BRACKET
"I" FORM

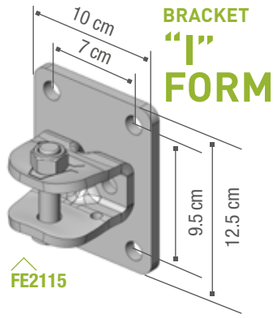

FE2115

EXTENDED MULTIFIX
BRACKET

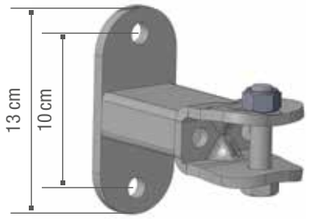

FE2114

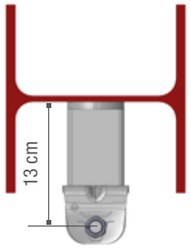

TRIO
FITTING

FE2010

SINGLE
BRACKET

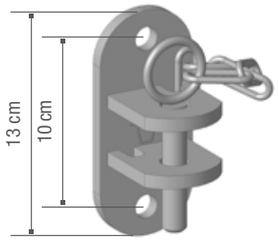

FE2102

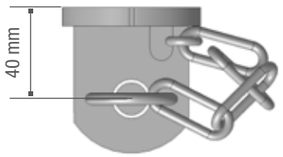

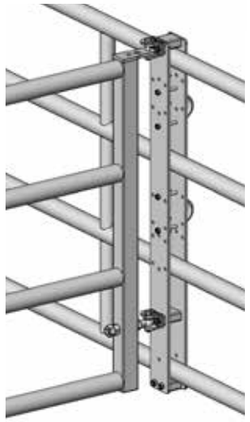

WALL END
BRACKET

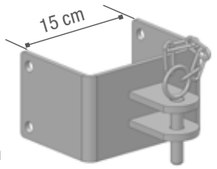

FE2107
For wall
150 mm

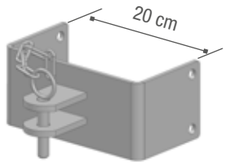

FE2108
For wall
200 mm

BRACKET (IN PAIR)

MULTIFIX BRACKET			
FE2117	MULTIFIX bracket with bolt Delivered with 1 bolt Ø 14 mm + nylon nut	(pair)	1.2 kg
FE2099	Short chain with carabiner	(pair)	0.32 kg
MULTIFIX EXTENDED BRACKET			
FE2114	Multifix extended H bracket	(pair)	2.8 kg
SINGLE BRACKET			
FE2102	Single bracket (for partition)	(pair)	2 kg
FE2115	Reinforced bracket "I" form	(pair)	2.7 kg
WALL END BRACKET			
FE2107	For wall of 15 cm	(pair)	8 kg
FE2108	For wall of 20 cm	(pair)	9 kg
DOUBLE BRACKET			
FE2101	Double bracket (for facades)	(pair)	4.4 kg
TRIPLE BRACKET			
FE2109	Triple bracket	(pair)	6 kg
TRIO FITTING			
FE2010	Trio fitting		18.5 kg
OV9935	ROUND bracket Ø 76 mm (for locking 2 gates AUTOLOCK)		1.1 kg

DOUBLE
BRACKET

FE2101

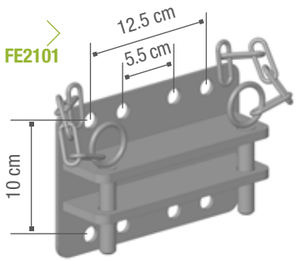

TRIPLE
BRACKET

FE2109

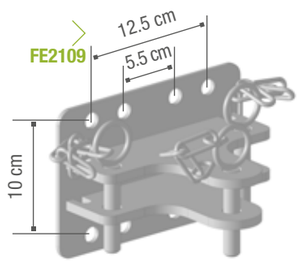

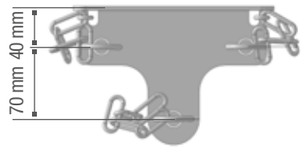

FE2099
Short chain
with carabiner

BRACKET
(UNIT)

BRACKET
(UNIT)

FE2017	MULTIFIX bracket with bolt	(Pack x 60)	0.6 kg
FE2014	Bracket extended MULTIFIX		1.4 kg
FE2002	Single bracket	(Pack x 40)	1 kg
FE2007	Bracket wall end 15 cm		4 kg
FE2008	Bracket wall end 20 cm		4.5 kg
FE2015	Reinforced bracket “I” form		1.35 kg
FE2001	Double bracket	(Pack x 16)	2.2 kg
FE2009	Triple bracket		3 kg

FE2017

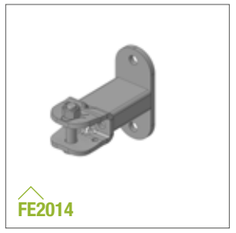
FE2014

FE2002

FE2015

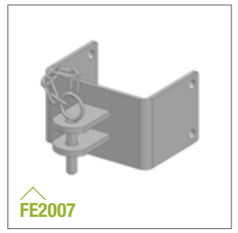
FE2007

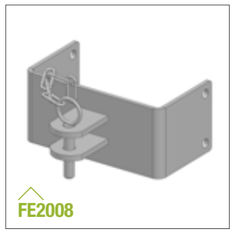
FE2008

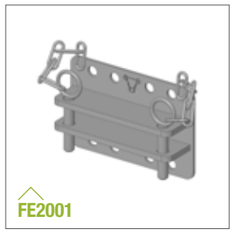
FE2001

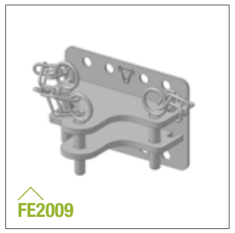
FE2009

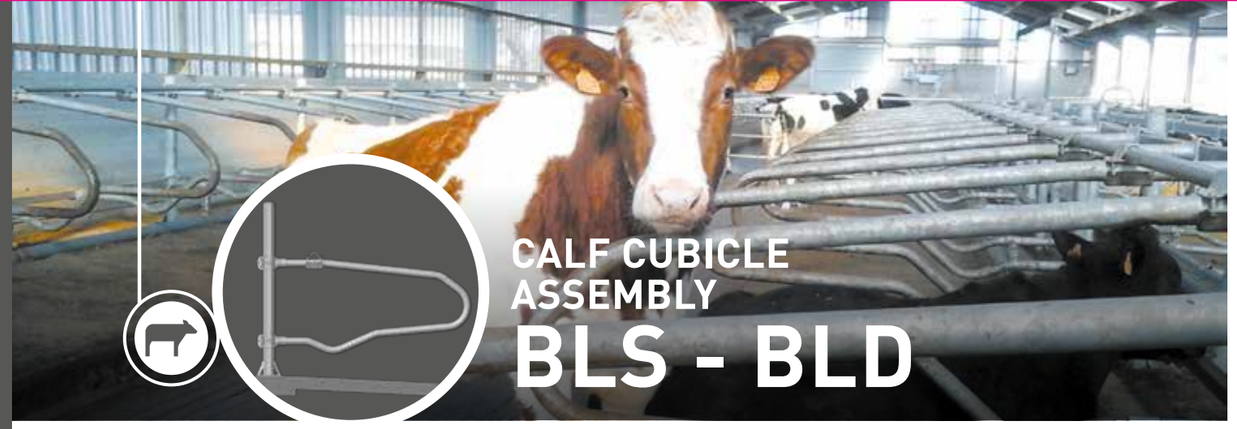

CALF CUBICLE ASSEMBLY
BLS - BLD

ASSEMBLY
EURO CALF BLS

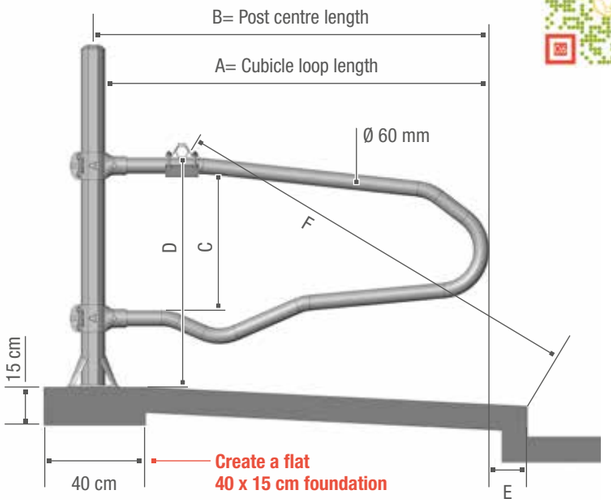

The dimensions are given as an indication. Please adapt them to suit your stock and the lying area.

	EURO CALF 1.50 m 7/12 months	EURO CALF 1.30 m 4/7 months
A =	1.50 m	1.30 m
B =	1.56 m	1.36 m
C =	54 cm	49 cm
D =	80 to 90 cm	76 to 80 cm
E =	15 cm	15 cm
F =	1.60 to 1.70 m	1.45 m to 1.55 m
CENTRE - CENTRE CUBICLE=	90 cm	80 cm

ASSEMBLY
EURO CALF BLD

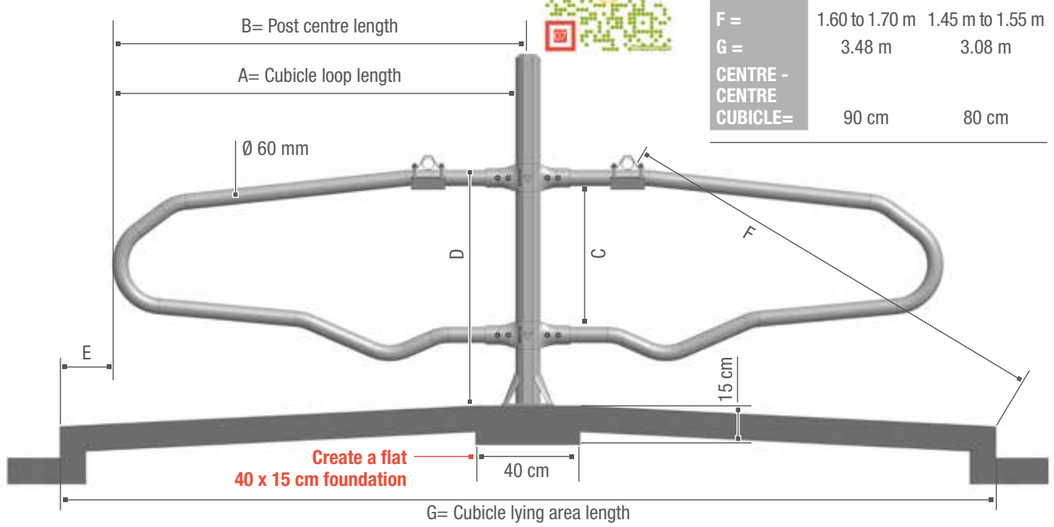

	EURO CALF 1.50 m 7/12 months	EURO CALF 1.30 m 4/7 months
A =	1.50 m	1.30 m
B =	1.59 m	1.39 m
C =	54 cm	49 cm
D =	80 to 90 cm	76 to 80 cm
E =	15 cm	15 cm
F =	1.60 to 1.70 m	1.45 m to 1.55 m
G =	3.48 m	3.08 m
CENTRE - CENTRE CUBICLE=	90 cm	80 cm

CALF LOOP

LO2513	Cubicle loop EURO calf bare L. 1.30 m	11 kg
LO2515	Cubicle loop EURO calf bare L. 1.50 m	13 kg

BLS BRACKET

Allow 1 post and a pair of BLS per loop.

LO3156	Bracket OCTAGONAL BLS for mounting on an OCTAGONAL post 102 mm **(pair)**	5.2 kg

BLD BRACKET

Allow 1 post and a pair of BLD for 2 loops.

LO3157	Bracket OCTAGONAL BLD (double cubicle bracket) for mounting on an OCTAGONAL post 102 mm **(pair)**	7.2 kg

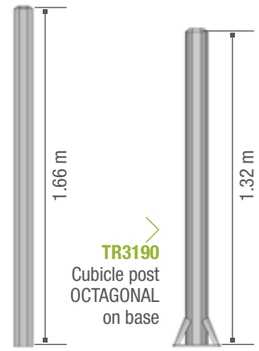

TR3189
Cubicle post OCTAGONAL to be set in

TR3190
Cubicle post OCTAGONAL on base

CUBICLE
POST

TR3189	Cubicle post OCTAGONAL for setting in 1.66 m	14 kg
TR3190	Cubicle post OCTAGONAL on base 1.32 m	15 kg

ST9943
Sleeve connector for tube Ø 49 mm

NECK BAR

LO9936	Bracket Robust 60/49 mm thickness 4 mm	1.7 kg
TU9756	Tube Ø 49 mm bar length 6 m (neck bar)	20 kg
ST9943	Sleeve connector for tube Ø 49 mm	0.5 kg
LO9941	Bracket neck bar support Ø 49 mm (unit)	0.6 kg

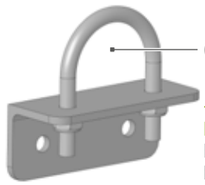

LO9941
Bracket neck bar support

LO3157
PAIR OF DOUBLE CUBICLE BRACKETS OCTAGONAL

LO3156
PAIR OF SINGLE CUBICLE BRACKETS OCTAGONAL

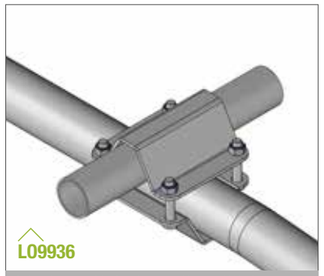

LO9936
BRACKET ROBUST THICKNESS 4 MM

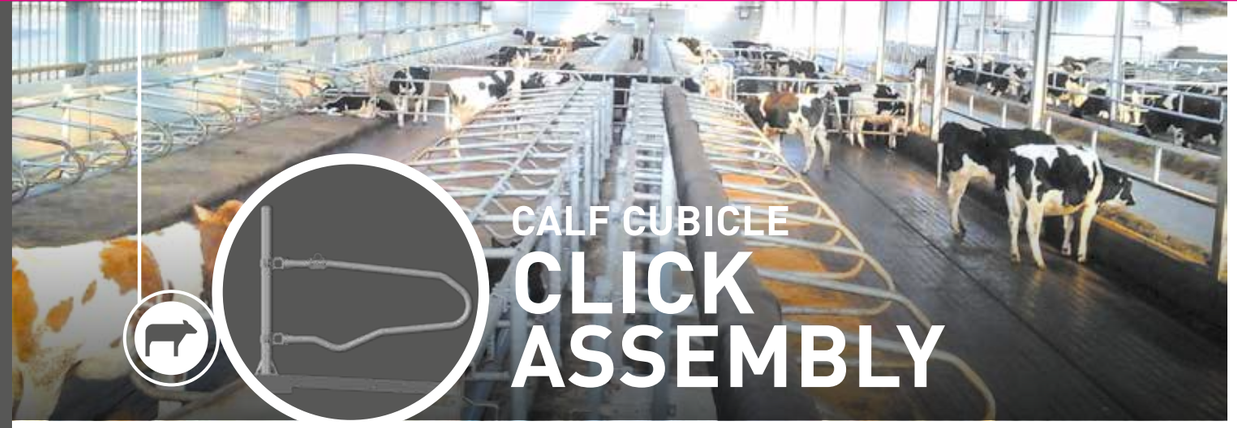

CALF CUBICLE CLICK ASSEMBLY

ASSEMBLY

EURO CALF CLICK SINGLE

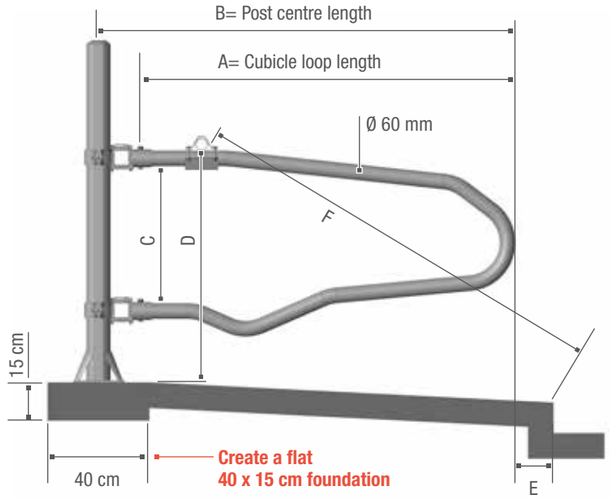

The dimensions are given as an indication. Please adapt them to suit your stock and the lying area.

	EURO CALF 1.50 m 7/12 months	EURO CALF 1.30 m 4/7 months
A =	1.50 m	1.30 m
B =	1.64 m	1.44 m
C =	54 cm	49 cm
D =	80 to 90 cm	75 to 80 cm
E =	15 cm	15 cm
F =	1.60 to 1.70 m	1.45 m to 1.55 m
CENTRE - CENTRE CUBICLE=	90 cm	80 cm

ASSEMBLY

EURO CALF CLICK DOUBLE

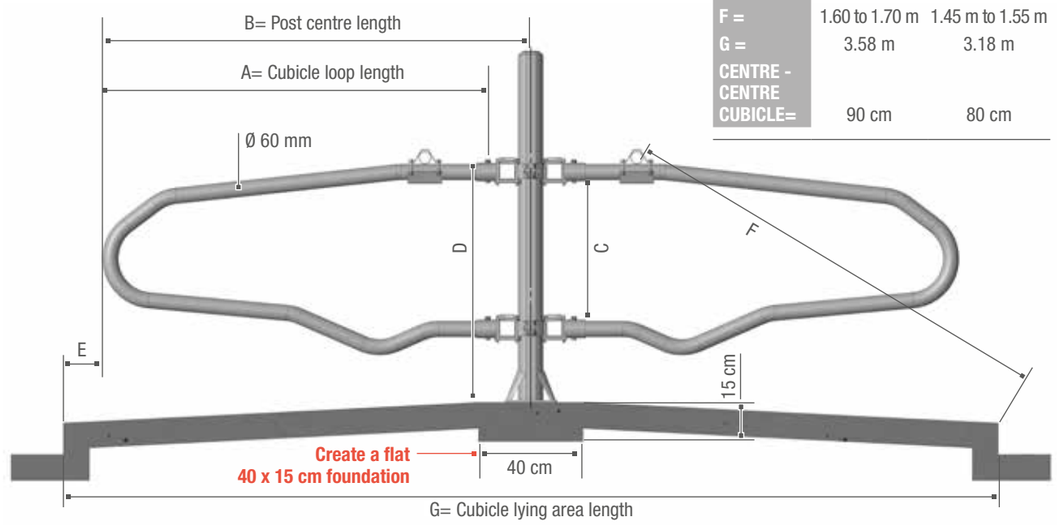

	EURO CALF 1.50 m 7/12 months	EURO CALF 1.30 m 4/7 months
A =	1.50 m	1.30 m
B =	1.64 m	1.44 m
C =	54 cm	49 cm
D =	80 to 90 cm	75 to 80 cm
E =	15 cm	15 cm
F =	1.60 to 1.70 m	1.45 m to 1.55 m
G =	3.58 m	3.18 m
CENTRE - CENTRE CUBICLE=	90 cm	80 cm

CALF LOOP

LO2513	Cubicle loop EURO calf bare Ø 60 mm L. 1.30 m	11 kg
LO2515	Cubicle loop EURO calf bare Ø 60 mm L. 1.50 m	13 kg

CLICK END

Allow 1 pair of CLICK ends per loop.

LO3120	Pair of "CLICK" type ends Ø 70 mm	4.8 kg

CUBICLE

POST

TR3189	Cubicle post OCTAGONAL for setting in 1.66 m	14 kg
TR3190	Cubicle post OCTAGONAL on base 1.32 m	15 kg

BRACKET

CUBICLE OCTAGONAL CLICK SINGLE

(2 brackets per post) thickness 8 mm

TR3151	Cubicle bracket OCTAGONAL CLICK single (unit)	3.2 kg

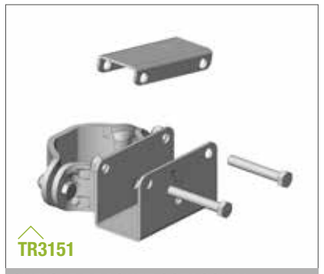

CUBICLE BRACKET OCTAGONAL CLICK SINGLE

BRACKET

CUBICLE OCTAGONAL CLICK DOUBLE

(2 brackets per post) thickness 8 mm

TR3152	Cubicle bracket OCTAGONAL CLICK double (unit)	4.7 kg

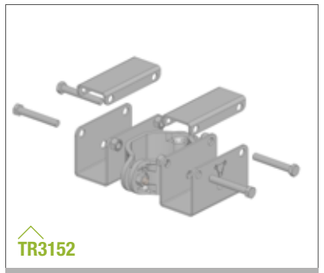

CUBICLE BRACKET OCTAGONAL CLICK DOUBLE

NECK BAR

LO9936	Bracket Robust 60/49 mm thickness 4 mm	1.7 kg
TU9756	Tube Ø 49 mm bar length 6 m (neck bar)	20 kg
ST9943	Sleeve connector for tube Ø 49 mm	0.5 kg
LO9941	Bracket neck bar support Ø 49 mm (unit)	0.6 kg

BRACKET ROBUST THICKNESS 4 MM

FRONTAL BAR

TU9665	Square tube 60 x 60 mm, L 6 m	30 kg
LO3155	Sleeve square frontal bar 60 x 60 mm	1.6 kg
LO9940	Bracket square frontal bar 60 x 60 mm **(pair)**	1.2 kg

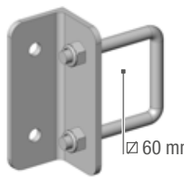

LO9940
Bracket square frontal bar

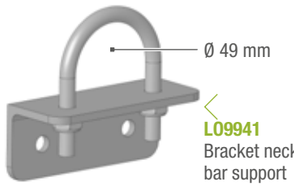

LO9941
Bracket neck bar support

LO3155
Sleeve square frontal bar

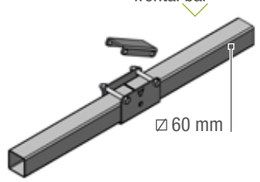

CALF CUBICLE KONDOR

CALF CUBICLE

KONDOR

THIS CUBICLE REPRODUCES THE EXACT FORM OF THE EURO CALF CUBICLE AND ITS POST.
It is not adjustable. It is not as strong as a BLS/BLD assembly and can be subject to more corrosion on the front foot. It is attached by Ø 12 mm Rawl bolts, bolted straight into the lying area base.

LO3114	Cubicle loop KONDOR on plate for calves L. 1.60m	20 kg

ST9943
Sleeve connector for tube Ø 49 mm

NECK BAR

LO9936	Bracket Robust 60/49 mm thickness 4 mm	1.7 kg
TU9756	Tube Ø 49 mm bar length 6 m (chest bar)	20 kg
ST9943	Sleeve connector for tube Ø 49 mm	0.5 kg
LO9941	Bracket neck bar support Ø 49 mm (unit)	0.6 kg

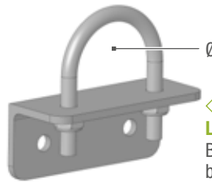

LO9941
Bracket neck bar support

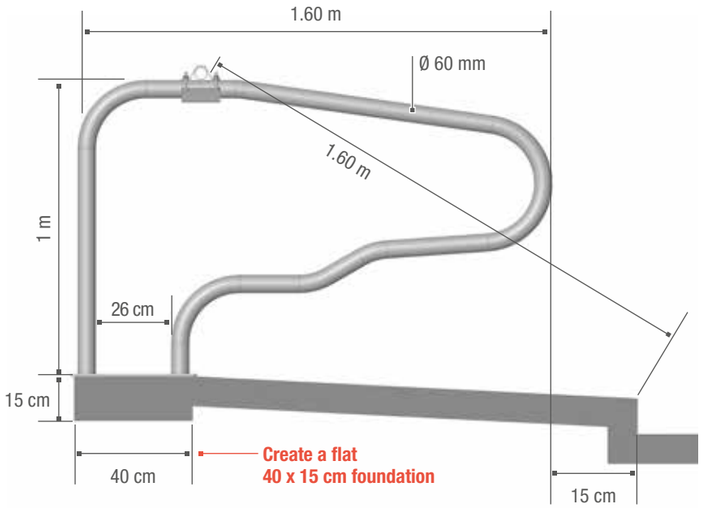

The distance between cubicle centres is between 80 and 90 cm. The dimensions are given as an indication. Please adapt them to suit your stock and the lying area.

! **IMPORTANT!** In order to prevent corrosion steel in zinc due to prolonged contact with silage, slurry or muck, it is recommended that bituminous paint TR0005 should be applied before use, and periodically thereafter, in order to protect the equipment: post feet, barrier and cubicle bottoms, knee bars, brackets...

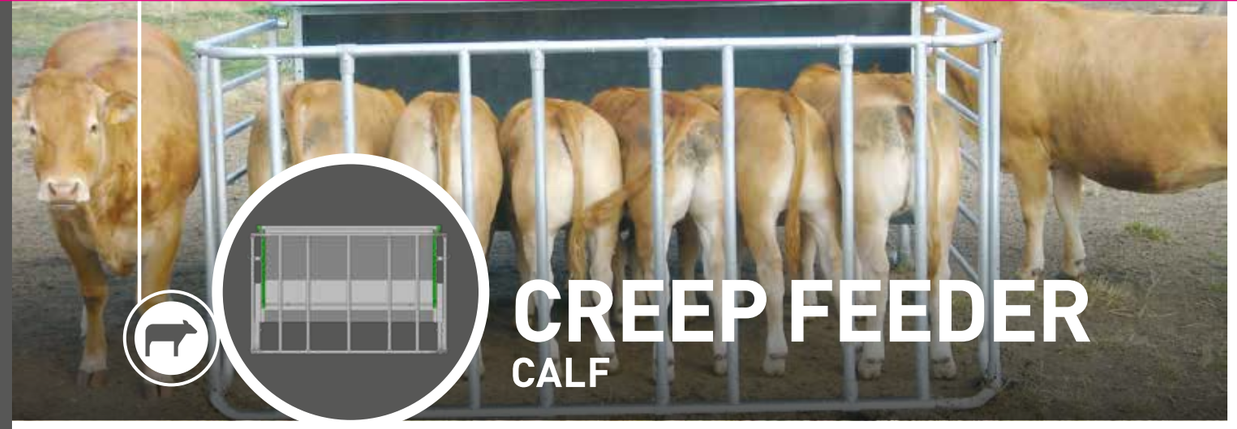

CREEP FEEDER
CALF

CREEP FEEDER
2,20 M

N07000

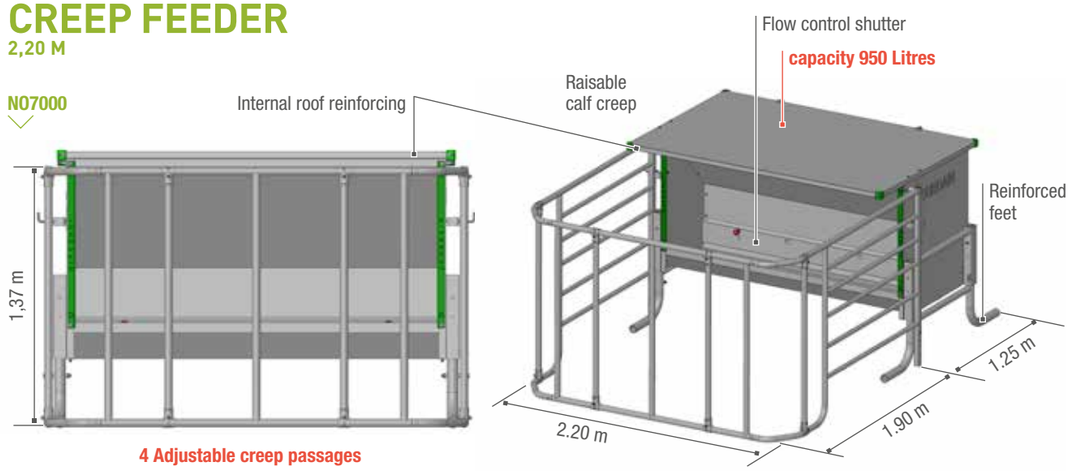

4 Adjustable creep passages

BIG CREEP FEEDER
3 M

N08000

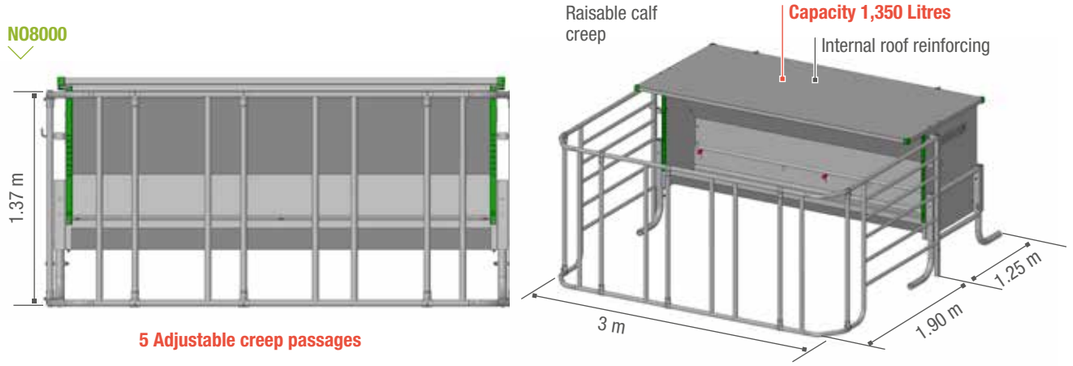

5 Adjustable creep passages

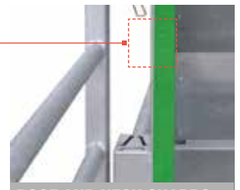

ROOF AND NECK GUARDS AS STANDARD

LOCKING ROOF

GALVANISED CREEP FEEDER

BIG ANTI-WASTE TROUGH. It is possible to feed adult cattle, including heavily horned animals either with the calf creep in the raised position or without the creep attached.

- The calf creep height prevents the adult animals from reaching over.
- The anti-waste trough is well sheltered by the overhanging roof. Adjustable flow.
- The back of the feeder can be hitched to a three-point linkage for transport, but only when it is empty with the creep raised.

FOR ROAD TRANSPORT, COMPLY WITH THE HIGHWAY CODE.

CREEP FEEDER 2.20 M			
N07000	Creep feeder 2.20 m	(Pack x 2)	333 kg
N07020	Creep feeder pen 2.20 m		82 kg
BIG CREEP FEEDER 3 M			
Back reinforced with 70 mm tube for transport when empty.			
N08000	Big creep feeder 3m	(Pack x 2)	456 kg
N08020	Big creep feeder pen 3 m		94 kg
BARRIER MOUNTED CALF FEEDER			
Movable feeder for supplementary feeding made from steel sheet 20/10ths. Opening lid.			
N09700	Calf feeder on barrier (neck protection included)	(Pack x 4)	65 kg

SMALL TROUGH
BARRIER MOUNTED

MOVABLE SUPPLEMENTARY BARRIER MOUNTED TROUGH FEEDER MADE FROM 20/10TH STEEL SHEET. Tilted for better animal access. Held by pins and raisable thanks to its brackets. Will fit EX 4 or EX 5 barriers.

VE3000	Barrier mounted trough L. 1.50 m	26 kg

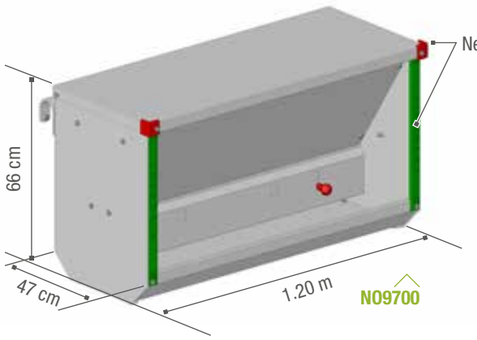

N09700

DOUBLE INTERNAL FOLDS TO ELIMINATE SHARP EDGES

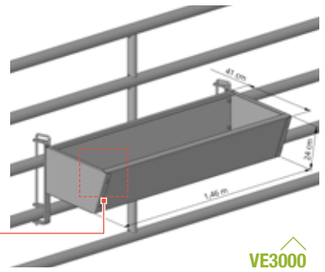

VE3000

NO SHARP CORNERS

MODULAR CALF HAY RACK

RA0731 NEW

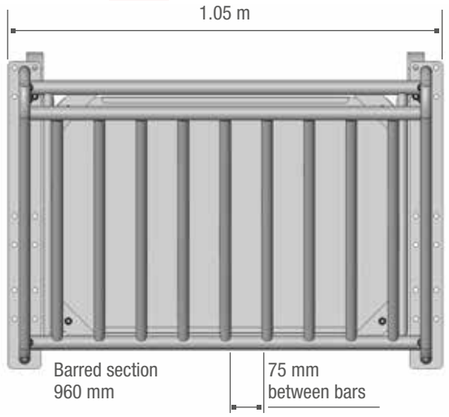

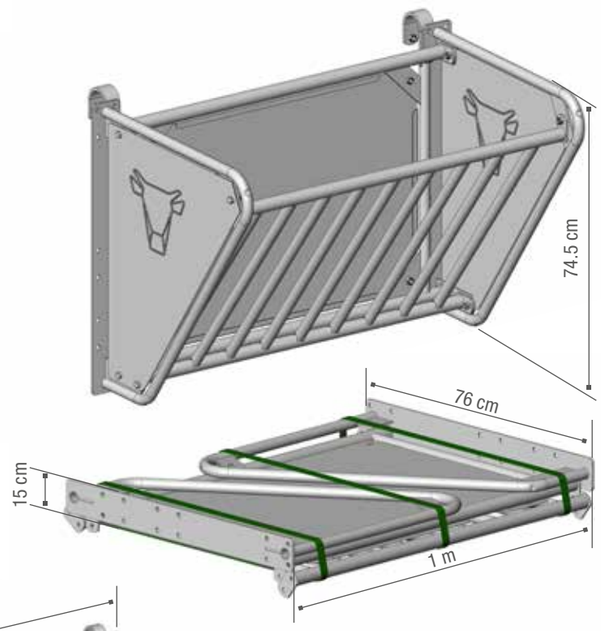

RA0732 NEW

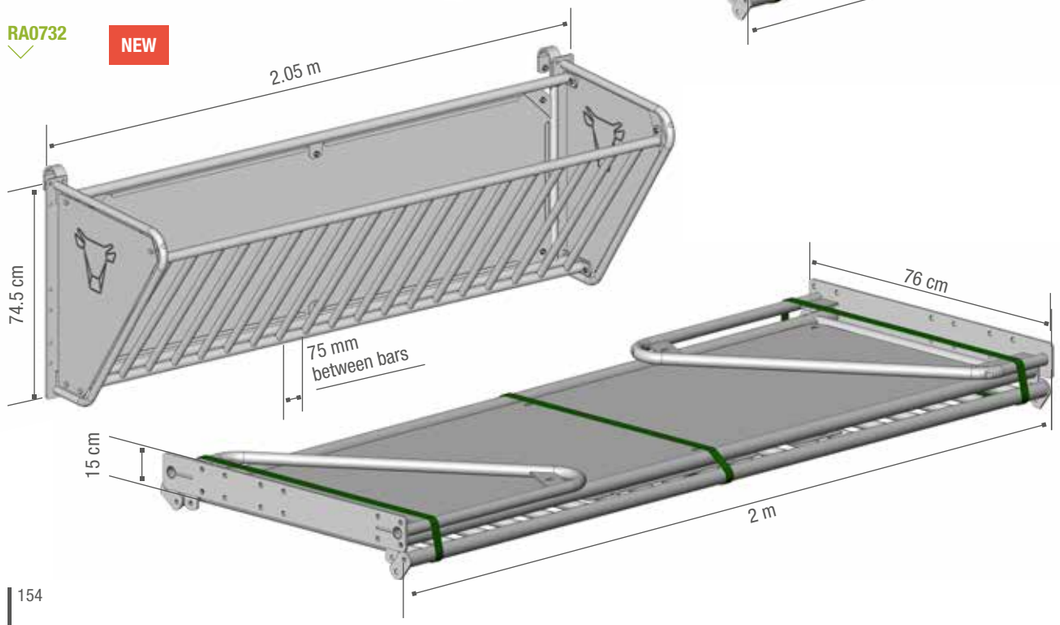

MODULAR CALF HAY RACK

INTENDED FOR SMALL ANIMALS ONLY

MODULAR HAY RACK FOR SMALL ANIMALS MADE FROM SECTIONS THAT ARE BOLTED TOGETHER. ROBUST DESIGN, IT IS MADE USING Ø 27 MM AND Ø 34 MM TUBE, WITH A STEEL SHEETED BACK. The ends are sheeted for animal safety, this model can be attached to EX barriers or field barriers it can even be wall mounted. The hay rack is delivered in kit form and available in lengths of 1 m and 2 m.

RA0731	Modular calf hay rack L. 1 m	(Pack x 6)	45.6 kg	NEW
RA0732	Modular calf hay rack L. 2 m	(Pack x 6)	70.4 kg	NEW

HAY RACK

SMALL ANIMALS

Made using Ø 8 mm weld mesh. Designed to straddle a partition, field gate or a side barrier.

RA0721	Hay rack for small animals	(Pack x 6)	15 kg

SMALL ANIMAL HAY RACK

RA0721

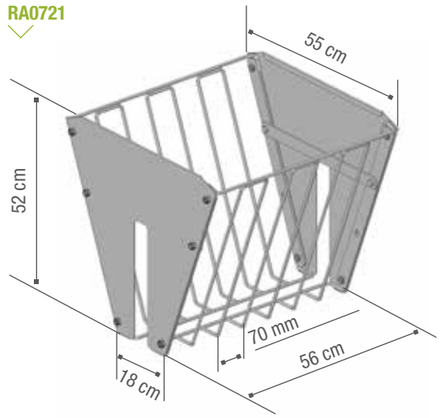

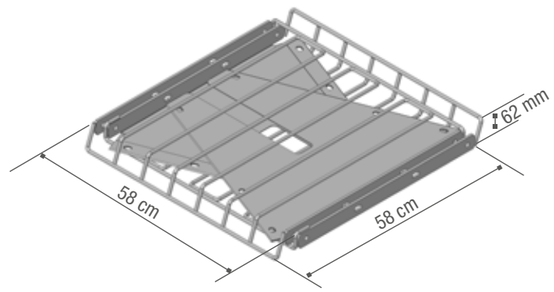

CALF PEN

PARTITION MADE FROM HDPE (HIGH-DENSITY POLYETHYLENE) DOUBLE SKINNED, SHOCK RESISTANT.
"UP & CLEAN" HDPE nonslip, raisable plastic slats.When attached the raised position, cleaning is easy with no obstacles on the ground. Opening front with safety bolt 2 headlock places, 2 folding bucket holders Ø 285 mm and a holder for a teated bucket. Quick assembly with pins, either in line or back to back.

YouTube ENTER JOURDAIN

DELIVERED WITH 2 BUCKETS AS STANDARD Ø 28.5cm, teated bucket as an option.

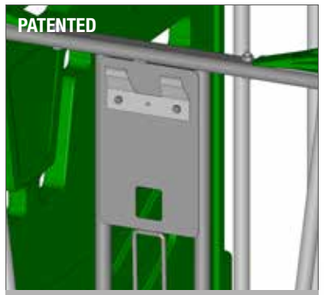

TEATED BUCKET SUPPORT

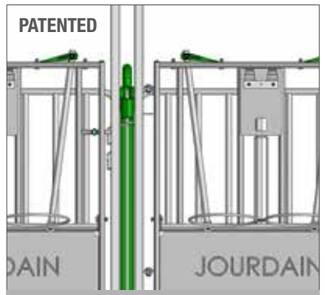

PIN ASSEMBLY

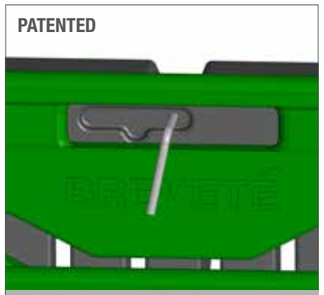

LOCKED IN RAISED POSITION

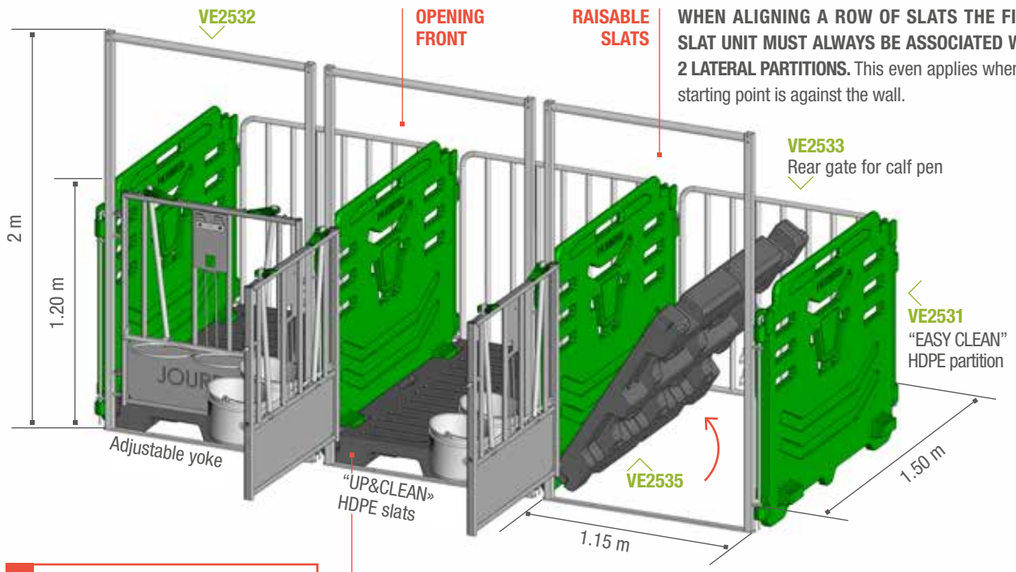

WHEN ALIGNING A ROW OF SLATS THE FIRST SLAT UNIT MUST ALWAYS BE ASSOCIATED WITH 2 LATERAL PARTITIONS. This even applies when the starting point is against the wall.

ATTENTION!
Disinfectants may discolour the partitions and the slats.

EASY CALF ACCESS Slat height=15 cm

EASY CLEAN CALF PEN
FOR CALVES OF UP TO 6 WEEKS OLD

VE2531	Composite side green "EASY CLEAN" 2 pins - height: 1.2 m	(Pack x 11)	13 kg
VE2532	Front for calf pen EASY CLEAN 2 buckets Ø 28.5 cm	(Pack x 10)	37 kg
VE2535	Composite slats "UP & CLEAN"	(Pack x 10)	22 kg
VE2533	Rear gate for calf pen		16 kg
VE2537	Side pin for calf pen (unit)		1 kg
VE2539	Flat wall brackets for calf pen (pair)		1.1 kg
VE2545	Bucket 12 L Ø 28.5 cm	(Pack x 4)	0.55 kg
VE2546	Teat buckets	(Pack x 5)	0.7 kg
VE2549	Single bucket teat		0.05 kg

SMALL ANIMAL HAY RACK

HAY RACK
SMALL ANIMALS

Made using Ø 8 mm weld mesh. Designed to straddle a partition, field gate or a side barrier.

RA0721	Hay rack for small animals	(Pack x 6)	15 kg

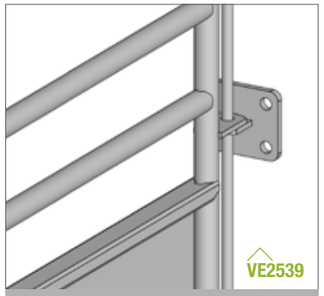

WALL MOUNTING

METAL CALF PEN
FOR CALVES OF UP TO 6 WEEKS OLD

VE2530	Side steel sheeted for calf pen 2 pins	(Pack x 11)	23 kg

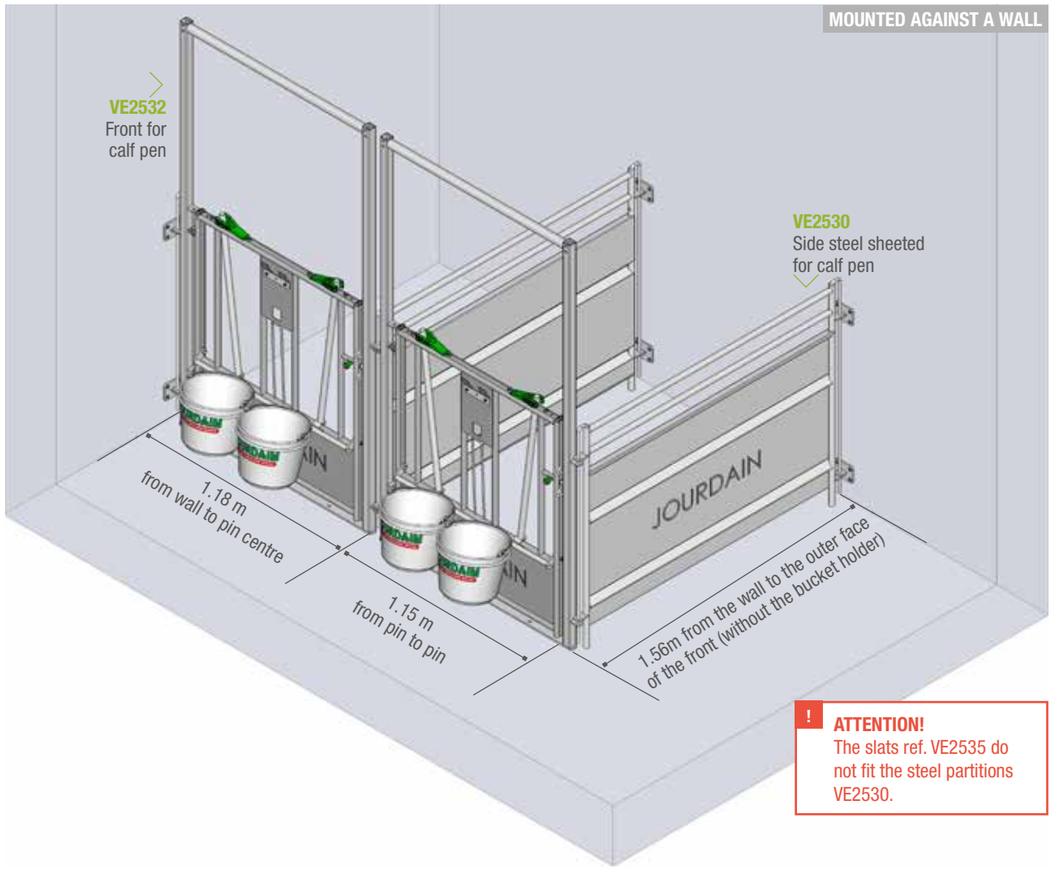

ATTENTION!
The slats ref. VE2535 do not fit the steel partitions VE2530.

GALVANISATION STORAGE

VERY IMPORTANT

THE HOT GALVANISATION PROCEDURE AND STORAGE RECOMMENDATIONS

All of our products are hot galvanised in compliance with the ISO 1461 standard. Galvanisation provides a zinc-based surface covering that is aimed to protect steel from corrosion.
Thanks to their design, all of our products are totally protected both on the outside and the inside thanks to the hot dipping technique where they are immersed in a liquid zinc bath that is maintained at 450°C.

The 1461 standard "Hot dip galvanized coatings on fabricated iron and steel articles" defines the properties, the minimal thicknesses and the characteristics of the hot dip galvanisation coating, together with the trial methods for checking the thickness of the zinc per surface area unit, its aspect and adherence, as well as the criteria for conformity.

Depending on the design of the part, the chemical composition of the steel, its thickness, its surface aspect and other technical parameters, the thicknesses of the zinc that has been deposited are variable but always within the indicated values defined in the 1461 standard.
Our galvanisation factory partner has ISO 9001 certification.

The zinc, when exposed to the atmosphere, reacts naturally with the ambient elements: moisture, oxygen, carbonic gases… and forms a film. This results in a reduction of the surface's metallic shininess where the aspect is concerned.
The film produced is insoluble, with a high level of adherence and provides added protection to the coating.

However the structure of this film is altered when it is in contact with stagnant water, and white stains with a low level of adherence and no protective characteristics are quickly formed. The level of protection provided by the zinc is not altered.

Galvanised equipment must only be stored on tannin free wood, and under no circumstances should it be left in contact with the ground. Air must be able to move freely around the different pieces, and stagnating water must be avoided.

Prolonged contact with slurry, farmyard manure, urine, silage, weedkillers, fertiliser, road protection products, pesticides, disinfectants or any other chemical product can lead to, in certain cases, rapid alteration of the zinc protective coating.

! **IMPORTANT!** In order to prevent corrosion steel in zinc due to prolonged contact with silage, slurry or muck, it is recommended that bituminous paint TR0005 should be applied before use, and periodically thereafter, in order to protect the equipment: post feet, barrier and cubicle bottoms, knee bars, brackets…

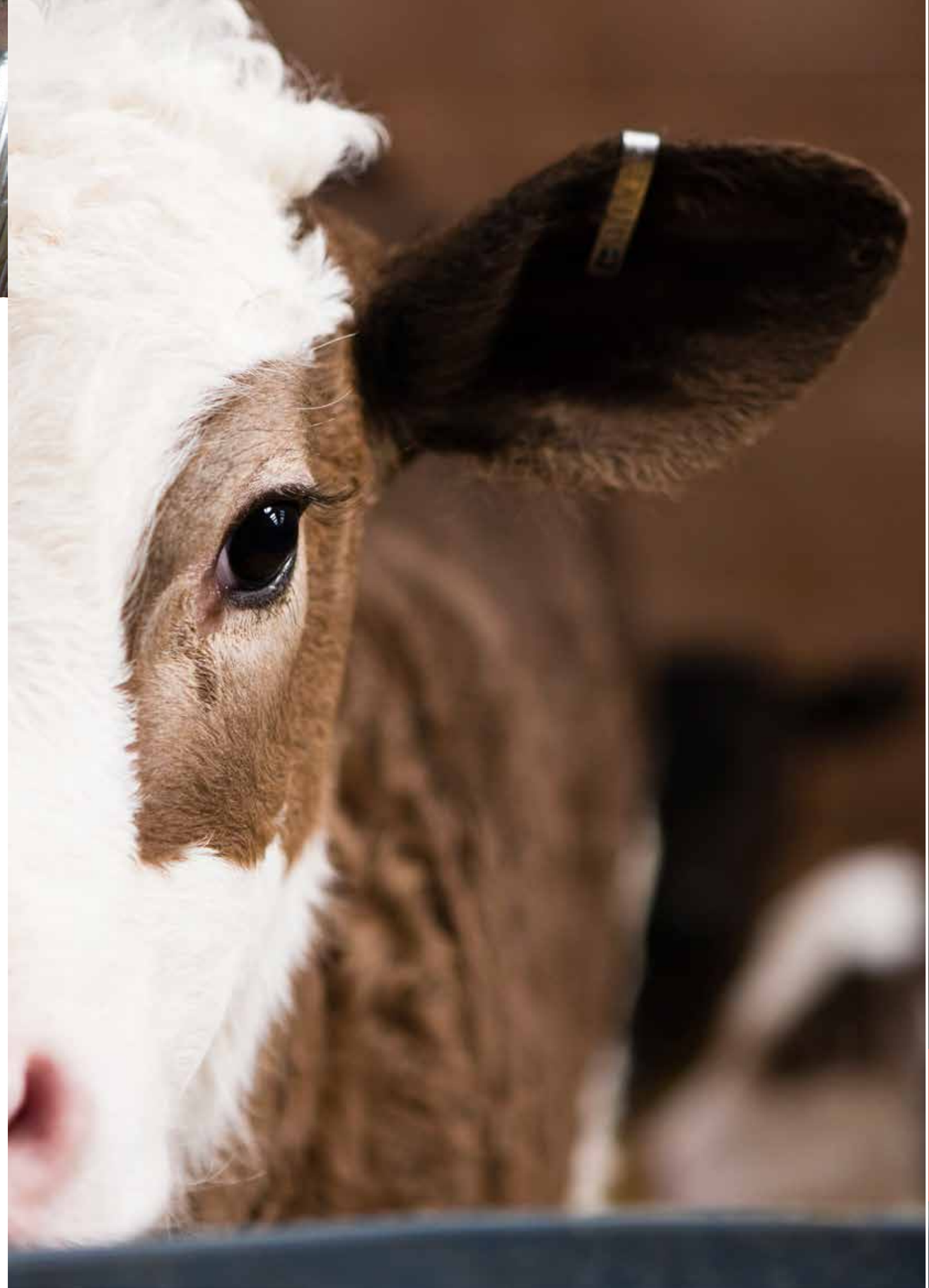

IMPORTANT INFORMATION

This Price list - Catalogue remains JOURDAIN's property.

The reproduction of our texts, notices, diagrams or photographs, even partially, is absolutely forbidden.
The photographs shown in this catalogue are noncontractual.
JOURDAIN is continually trying to improve the efficiency of its equipment, and therefore reserves the right to modify, without prior warning, and without it being held against the company, the characteristics of the models shown in this brochure.

Although the conditions imposed on our suppliers, and the detailed checks that are carried out at all levels of production enable us to give the accurate weights of our products, it is possible that there may be variations of +/-2% which may be largely due to the different quantities of zinc held inside tubes after each dipping.

! When transporting products such as:
hay racks, feeders, transpanel…
It is absolutely imperative that the highway code is complied with.
Under no circumstances can SAS JOURDAIN be held responsible in the event of an accident.

In order to have the optimum use from products, it is essential to check that everything is correctly tightened and that any moving parts are lubricated regularly.

Despite all the attention to detail that we put into the design of our products with animal welfare and maximising safety as our top priorities, JOURDAIN cannot be held responsible for any accident involving an animal.

The knowledge and the daily surveillance of the livestock by the stockman remain the most reliable means of accident prevention.

CORROSION

OF GALVANISED STEEL AND PARASITE ELECTRIC CURRENTS

All JOURDAIN products are galvanised in compliance with the 1461 standard in just the same way as all the other livestock equipment on the market.

However, depending on its environment, there can even be a risk of galvanised steel corroding in the medium to long-term in spite of its surface treatment.

The evolution of the composition of livestock rations, veterinary products, maintenance products, chemical sprays or a combination of the aforementioned can be factors that are capable of altering the zinc protective coating.

This mix works in the same way as a battery: contact with oxygen and acted on by the electricity present in the installation (parasite, static, telluric …), leading to the zinc's structure being modified and the protective film altered. Due to this, the phenomenon of corrosion can appear in a very short time.

The end result being that there are multiple causes of corrosion that are sometimes difficult to detect in order to provide an explanation of why we are seeing what we do on posts.

HOWEVER, IN ORDER TO PREVENT THIS PHENOMENON, WE STRONGLY ADVISE THE FOLLOWING:

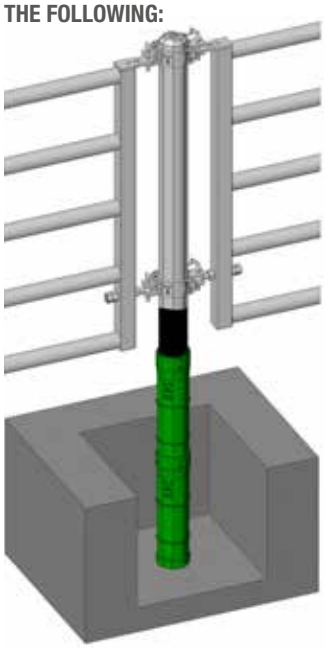

Double sleeve
(first sleeve set in)
+
Bituminous paint
(we strongly advise that it is renewed annually)